JVC

SERVICE MANUAL

COLOUR TELEVISION

BASIC CHASSIS
CL

AV-K29MX3
AV-K29MX3(-A)
AV-K29MX3(-SC)

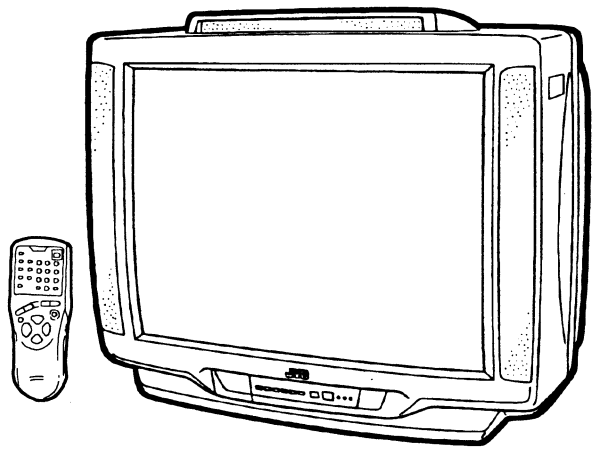

CONTENTS

■ SPECIFICATIONS ····· 2
■ SAFETY PRECAUTIONS ····· 3
■ FEATURES ····· 4
★ OPERATING INSTRUCTIONS (APPENDED) ····· 1-1
■ MODEL ID. / MAIN DIFFERENCE LIST ····· 5
■ SPECIFIC SERVICE INSTRUCTIONS ····· 6
■ SERVICE ADJUSTMENTS ····· 11
★ STANDARD CIRCUIT DIAGRAM (APPENDED) ····· 2-1
■ PARTS LIST ····· 27

COPYRIGHT © 1997 VICTOR COMPANY OF JAPAN, LTD.

No. 51224
May 1997

SPECIFICATIONS

Item	Content
Dimensions(W×H×D)	73.4cm×60.5cm×52.1cm
Mass	40.9kg
TV RF System	CCIR B / G, I, D / K, K1 / M
Colour System	PAL / SECAM / NTSC 3.58 / NTSC 4.43
Stereo System	PLAYBACK ONLY
Receiving Frequency	
VHF (VL)	46.25MHz~168.25MHz
VHF (VH)	175.25MHz~463.25MHz
UHF	471.25MHz~863.25MHz
CATV	● Cable TVs of Mid (X-Z, S1-S10) Super (S11-S20) & Hyper (S21-S41) bands receivable
Intermediate Frequency	
VIF Carrier	38.0MHz
SIF Carrier	32.5MHz (5.5MHz), 31.5MHz (6.5MHz) 33.5MHz (4.5MHz), 32.0MHz (6.0MHz)
Colour Sub Carrier Frequency	PAL (4.43MHz), SECAM (4.40625MHz, 4.25MHz) NTSC (3.58MHz, 4.43MHz)
Aerial Input Terminal	75Ω Unbalanced
Power Input	
Rated Voltage	AC120~240V, 50 / 60Hz
Operating Voltage	AC90~260V, 50 / 60Hz
Power Consumption	190W (Max.) / 110W (Avg.)
Picture Tube	Visible size : 68cm measured diagonally
High Voltage	31kV±1kV(at zero beam current)
Speaker	10cm Round type×2 / 3.5cm Round type×2
Audio Output	15W + 15W
Video-1,-2&-3 Input	
Video	1Vp-p, 75Ω
Audio	500mVrms (-4dBs), High impedance
Line Out	
Video	1Vp-p, 75Ω
Audio	500mVrms (-4dBs), Low impedance
Headphone Terminal	Stereo mini jack
Remote Control Unit	RM-C439 (Battery size : AA(R6)×2)

Design & specification are subject to change without notice.

SAFETY PRECAUTIONS

1. The design of this product contains special hardware, many circuits and components specially for safety purposes. For continued protection, no changes should be made to the original design unless authorized in writing by the manufacturer. Replacement parts must be identical to those used in the original circuits. Service should be performed by qualified personnel only.

2. Alterations of the design or circuitry of the products should not be made. Any design alterations or additions will void the manufacturer's warranty and will further relieve the manufacturer of responsibility for personal injury or property damage resulting therefrom.

3. Many electrical and mechanical parts in the products have special safety-related characteristics. These characteristics are often not evident from visual inspection nor can the protection afforded by them necessarily be obtained by using replacement components rated for higher voltage, wattage, etc. Replacement parts which have these special safety characteristics are identified in the parts list of Service manual. **Electrical components having such features are identified by shading on the schematics and by (⚠) on the parts list in Service manual.** The use of a substitute replacement which does not have the same safety characteristics as the recommended replacement part shown in the parts list of Service manual may cause shock, fire, or other hazards.

4. **Don't short between the LIVE side ground and ISOLATED (NEUTRAL) side ground or EARTH side ground when repairing.**
   Some model's power circuit is partly different in the GND. The difference of the GND is shown by the LIVE : (⊥) side GND, the ISOLATED(NEUTRAL) : (⊥) side GND and EARTH : (⏚) side GND. Don't short between the LIVE side GND and ISOLATED(NEUTRAL) side GND or EARTH side GND and never measure with a measuring apparatus (oscilloscope etc.) the LIVE side GND and ISOLATED(NEUTRAL) side GND or EARTH side GND at the same time.
   If above note will not be kept, a fuse or any parts will be broken.

5. If any repair has been made to the chassis, it is recommended that the B1 setting should be checked or adjusted (See ADJUSTMENT OF B1 POWER SUPPLY).

6. The high voltage applied to the picture tube must conform with that specified in Service manual. Excessive high voltage can cause an increase in X-Ray emission, arcing and possible component damage, therefore operation under excessive high voltage conditions should be kept to a minimum, or should be prevented. If severe arcing occurs, remove the AC power immediately and determine the cause by visual inspection (incorrect installation, cracked or melted high voltage harness, poor soldering, etc.). To maintain the proper minimum level of soft X-Ray emission, components in the high voltage circuitry including the picture tube must be the exact replacements or alternatives approved by the manufacturer of the complete product.

7. Do not check high voltage by drawing an arc. Use a high voltage meter or a high voltage probe with a VTVM. Discharge the picture tube before attempting meter connection, by connecting a clip lead to the ground frame and connecting the other end of the lead through a 10kΩ 2W resistor to the anode button.

8. When service is required, observe the original lead dress. Extra precaution should be given to assure correct lead dress in the high voltage circuit area. Where a short circuit has occurred, those components that indicate evidence of overheating should be replaced. Always use the manufacturer's replacement components.

9. **Isolation Check**
   (Safety for Electrical Shock Hazard)
   After re-assembling the product, always perform an isolation check on the exposed metal parts of the cabinet (antenna terminals, video/audio input and output terminals, Control knobs, metal cabinet, screwheads, earphone jack, control shafts, etc.) to be sure the product is safe to operate without danger of electrical shock.

(1) **Dielectric Strength Test**
The isolation between the AC primary circuit and all metal parts exposed to the user, particularly any exposed metal part having a return path to the chassis should withstand a voltage of 3000V AC (r.m.s.) for a period of one second.
(. . . . Withstand a voltage of 1100V AC (r.m.s.) to an appliance rated up to 120V, and 3000V AC (r.m.s.) to an appliance rated 200V or more, for a period of one second.)
This method of test requires a test equipment not generally found in the service trade.

(2) **Leakage Current Check**
Plug the AC line cord directly into the AC outlet (do not use a line isolation transformer during this check.). Using a "Leakage Current Tester", measure the leakage current from each exposed metal part of the cabinet, particularly any exposed metal part having a return path to the chassis, to a known good earth ground (water pipe, etc.). Any leakage current must not exceed 0.5mA AC (r.m.s.).

● **Alternate Check Method**
Plug the AC line cord directly into the AC outlet (do not use a line isolation transformer during this check.). Use an AC voltmeter having 1000 ohms per volt or more sensitivity in the following manner. Connect a 1500Ω 10W resistor paralleled by a 0.15μF AC-type capacitor between an exposed metal part and a known good earth ground (water pipe, etc.). Measure the AC voltage across the resistor with the AC voltmeter. Move the resistor connection to each exposed metal part, particularly any exposed metal part having a return path to the chassis, and measure the AC voltage across the resistor. Now, reverse the plug in the AC outlet and repeat each measurement. Any voltage measured must not exceed 0.35V AC (r.m.s.). This corresponds to 0.5mA AC (r.m.s.).

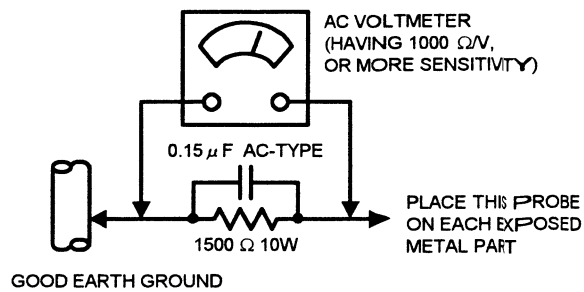

FEATURES

- New chassis design enables use of an interactive on-screen control.
- Wide range voltage (90V~260V) AC power input.
- With AUDIO / VIDEO INPUT & OUTPUT terminal.
- MUTE button can reduce the audio level to zero instantly.
- Functional remote control to operate TV set (for channel select, volume control, power ON/OFF, etc.) from a distance.
- I²C bus control utilizes single chip ICs for IF, V/C and VSM.
- By means of AUTO PROGRAM, the TV stations can be selected automatically and the TV channels can also be rearranged automatically.
- Built-in ECO MODE (ECONOMY, ECOLOGY)
  In accordance with the brightness in a room, the brightness and / of contrast of the picture can be adjusted automatically to make the optimum picture which is easy on the eye.

■SYSTEM BLOCK DIAGRAM

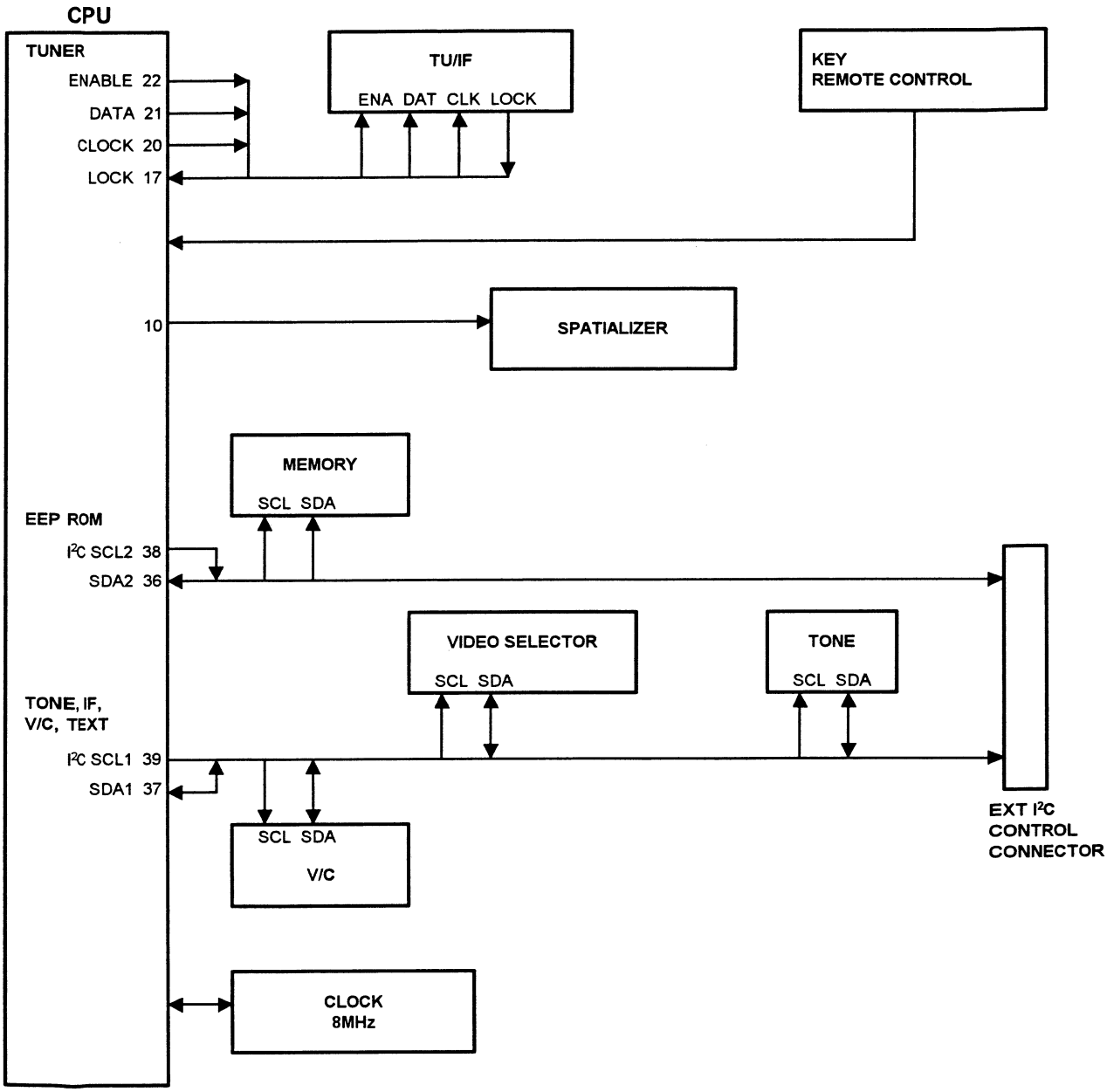

OPERATING INSTRUCTIONS

[AV-K29MX1/AV-K29MX1(-A)/AV-K29MX1(-SC)]
[AV-K29MX3/AV-K29MX3(-A)/AV-K29MX3(-SC)]

JVC

COLOUR TELEVISION

AV-K29MX3
AV-K29MX1

CONTENTS

LOCATIONS 2
PREPARATION 4
VIEWING A TELEVISION PROGRAMME 12
VIEWING IMAGES FROM AN EXTERNAL DEVICE 14
SOUND AND PICTURE 15
OTHER FEATURES 17
TROUBLESHOOTING 19
SPECIFICATIONS ... *Back cover*

INSTRUCTIONS

Thank you for purchasing this JVC colour television.
To ensure your complete understanding, please read this manual thoroughly before operation.

WARNING:

TO PREVENT FIRE OR SHOCK HAZARD, DO NOT EXPOSE THIS APPLIANCE TO RAIN OR MOISTURE.

CAUTION:

- TO ENSURE PERSONAL SAFETY, OBSERVE THE FOLLOWING RULES REGARDING THE USE OF THIS TV.
- Operate only from the power source specified on the TV.
- Avoid damaging the power plug and power cord.
- Avoid improper installation and never position this TV where good ventilation is unattainable. When installing this TV distance recommendations must be maintained between the floor and wall, as well as installment in a tightly enclosed area or piece of furniture. Adhere to the minimum distance guidelines shown for safe operation.

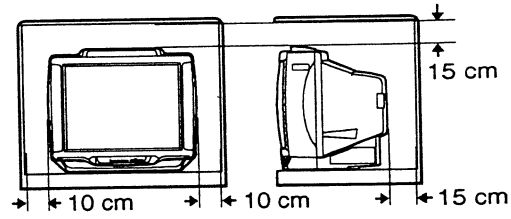

- Do not allow objects or liquid into the cabinet openings.
- In the event of a fault, unplug this TV and call a service technician. Do not attempt to repair it yourself or remove the rear cover.
- When you don't use this TV for a long period of time, be sure to disconnect the power plug from the AC outlet.

LOCATIONS

Locations of remote control buttons

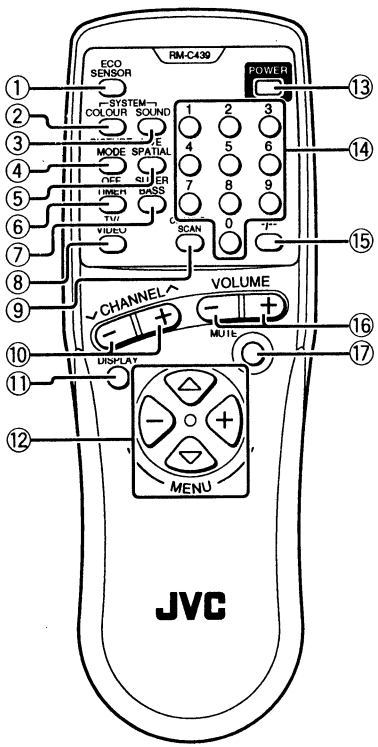

① ECO SENSOR button	p.17
② COLOUR SYSTEM button	p.15
③ SOUND SYSTEM button	p.15
④ PICTURE MODE button	p.15
⑤ LIVE SPATIAL button	p.15
⑥ OFF TIMER button	p.17
⑦ SUPER BASS button ***Note:*** • The remote control for AV-K29MX1 does not have this button.	p.15
⑧ TV/VIDEO button	p.14
⑨ CHANNEL SCAN button	p.13
⑩ CHANNEL ∨/∧ button	p.12
⑪ DISPLAY button	p.17
⑫ MENU buttons • MENU ▲/▼ buttons • MENU –/+ buttons	
⑬ POWER button	p.6,12
⑭ Number buttons	p.12
⑮ -/-- button	p.12
⑯ VOLUME –/+ buttons	p.13
⑰ MUTE button	p.13

Locations of front panel buttons and lamps

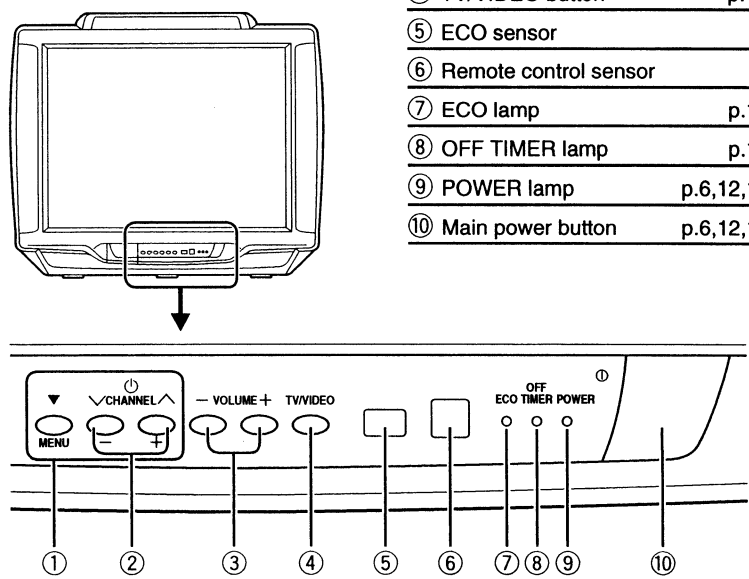

① MENU buttons • MENU buttons • MENU –/+ buttons	p.18
② CHANNEL ∨/∧ buttons	p.13
③ VOLUME –/+ buttons	p.13
④ TV/VIDEO button	p.14
⑤ ECO sensor	
⑥ Remote control sensor	
⑦ ECO lamp	p.17
⑧ OFF TIMER lamp	p.17
⑨ POWER lamp	p.6,12,13
⑩ Main power button	p.6,12,13

1. Connecting the aerial and external devices

Notes:

- For further details, refer to manuals provided with the devices you are connecting.
- Connecting cables are not supplied.
- When connecting monaural audio to the TV, use the L/MONO jack.
- The sound and picture that you are watching are output from LINE OUT jacks on the rear panel.
- Use headphones with a stereo mini jack (dia. 3.5 mm). When using headphones, the speaker sound output is disabled.

■ Connecting the aerial and VCR

If not connecting a VCR (video cassette recorder), do [1].
If connecting a VCR, proceed ① → ② → ③.

- You can view images from the VCR without doing ③. For details, see "To view images from a VCR connected to the TV with only an aerial cable" on page 14.

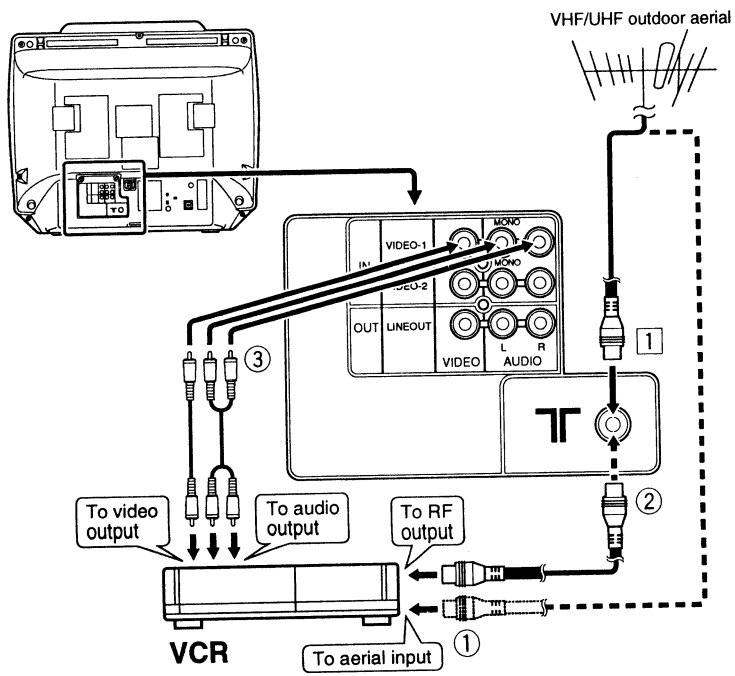

■ Connecting other external devices

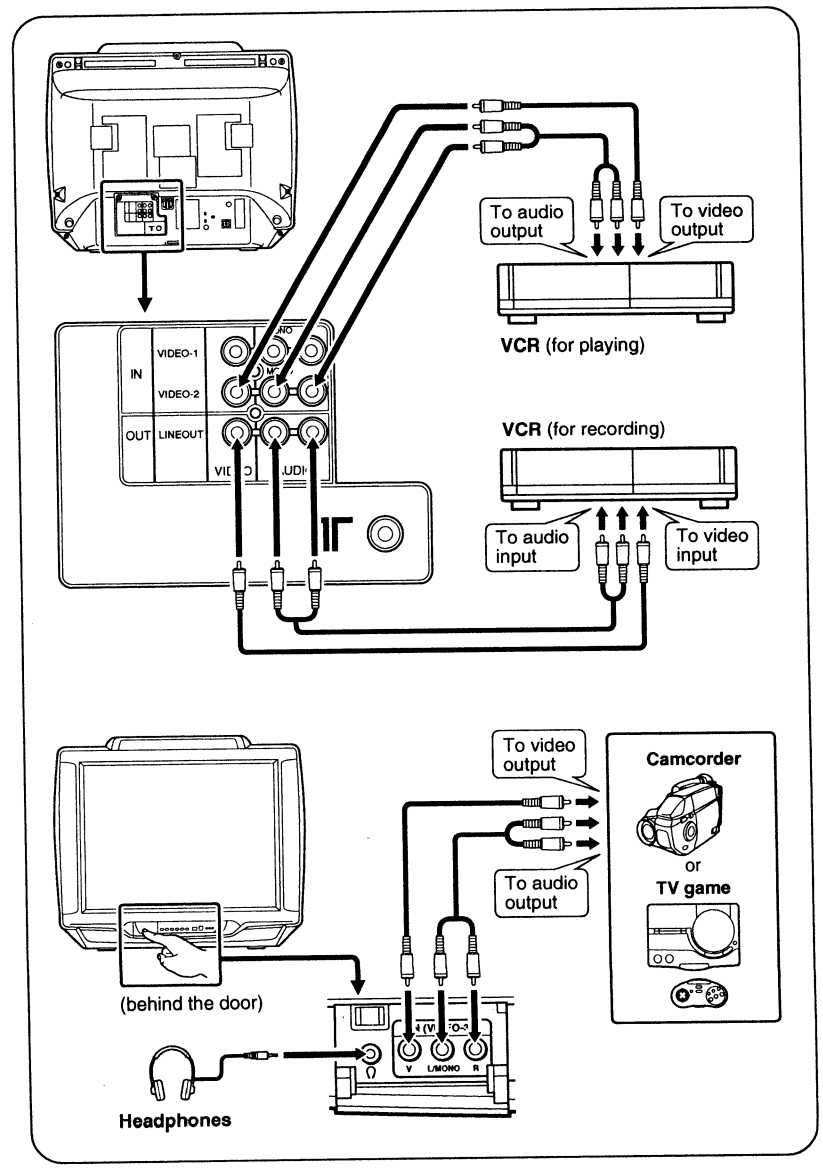

2. Connecting the power cord

Insert the Power plug into an AC outlet.

3. Inserting batteries into the remote control

Correctly insert two batteries, observing the ⊕ and ⊖ polarities, inserting the ⊖ end first.

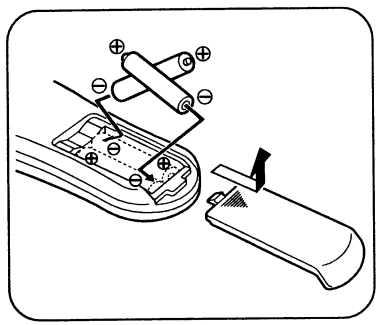

CAUTION:

- Follow the cautions printed on the batteries.

Notes:

- Use AA/R6/UM-3 dry cell batteries.
- Battery life is approximately six months to one year depending on frequency of use.
- If the remote control operates erratically, replace the batteries.
- We recommend that you use the supplied batteries initially and replace them as soon as operation becomes erratic. The supplied batteries are for testing, not regular use.

4. Turning your TV on

1. Press the Main power button on the TV to turn the main power on.

The POWER lamp lights red (main power on), then green (TV on).

If the POWER lamp stays red and does not change to green:
Your TV is in the standby mode. Press the POWER button on the remote control to turn your TV on.

- You can also turn on your TV by pressing the CHANNEL ∨/∧ button on your TV.

To turn your TV off:
Press the POWER button on the remote control. The POWER lamp changes from green to red and your TV enters the standby mode.

To turn the main power off:
Press the Main power button on the TV. The POWER lamp goes off.

5. Selecting the on-screen language

You can select one of three languages for the on-screen display. The displayed menus on the screen are described in the selected language.
In this manual, on-screen descriptions are given in English. Select ENG (English).

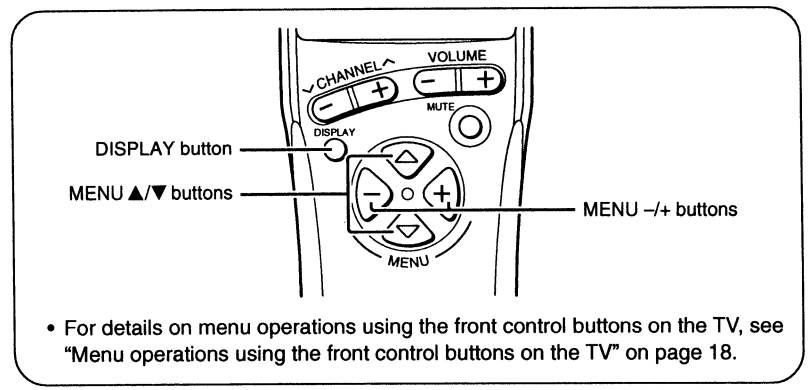

- For details on menu operations using the front control buttons on the TV, see "Menu operations using the front control buttons on the TV" on page 18.

1. Press MENU ▲/▼ to display the following menu.
The following menu is displayed in one of three languages.

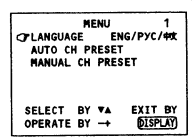

English

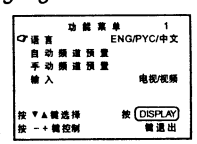

Chinese

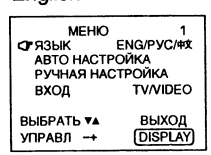

Russian

Note:

- If a different menu is displayed, repeatedly press the MENU ▲/▼ button until this menu is displayed.
- If the menu appears in English, the TV's on-screen language is already set to English, so you can skip steps 2 and 3.

2. Make sure that the topmost function in the menu is selected.

- If a different function is selected, press the MENU ▲ button to select the topmost item.

3. Press MENU –/+ to select ENG (English) .
The menu is displayed in English.

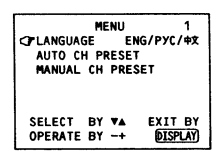

4. Proceed to "6. Presetting TV stations" on the following page.

- If you want to complete operations at this stage, press the DISPLAY button to turn the menu display off.

6. Presetting TV stations

To view a TV programme, you must first preset TV stations to channels on the TV. This TV has 100 channels (channel 1 to 99 and channel AV).
You can choose between two functions, AUTO CH PRESET and MANUAL CH PRESET and preset TV stations to channels on TV.

Note:

- After you have finished presetting, you can set undesired channels to be skipped over (see "SKIP" on page 11.

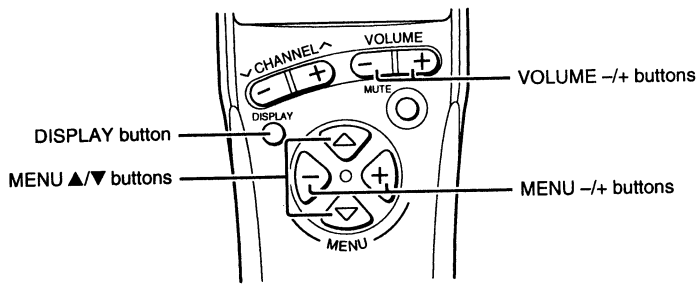

- For details on menu operations using the front control buttons on the TV, see "Menu operations using the front control buttons on the TV" on page 18.

■ AUTO CH PRESET

You can automatically preset all TV stations that can be received on your TV to channels in a simple operation.

Note:

- When you use this function, no station is preset to the channel AV.
  Channel AV is offered for viewing images from a VCR connected to your TV with only an aerial cable. For more details, see "To view images from a VCR connected to the TV with only an aerial cable" on page 14.

1. Press MENU ▲/▼ to select AUTO CH PRESET in the "MENU 1" menu.

```
        MENU          1
 LANGUAGE     ENG/РУС/中文
☞AUTO CH PRESET
 MANUAL CH PRESET

SELECT  BY ▼▲    EXIT BY
OPERATE BY –+    DISPLAY
```

To display this menu:
Repeatedly press MENU ▲/▼ button until it is displayed.

2. Press MENU – /+ to start the AUTO CH PRESET function.
" >>> ON SEARCH" is displayed on the screen.

When you have finished presetting all TV channels that can be received on your TV, the display will go out and the AUTO CH PRESET function will end.

- To stop AUTO CH PRESET, press the MENU –/+ button.

■ MANUAL CH PRESET

You can manually preset the desired TV stations to the desired channels.

1. Press MENU ▲/▼ to select MANUAL CH PRESET in the "MENU 1" menu.

```
        MENU          1
 LANGUAGE     ENG/РУС/中文
 AUTO CH PRESET
☞MANUAL CH PRESET

SELECT  BY ▼▲    EXIT BY
OPERATE BY –+    DISPLAY
```

To display this menu:
Repeatedly press the MENU ▲/▼ button until it is displayed.

2. Press MENU –/+.
The sub-menu is displayed.

```
☞MANUAL
  FINE
  SKIP                NO
  SOUND SYSTEM      B/G
  EXIT
SELECT  BY ▼▲    PR 1 VL
PROGRAM BY –+    EXIT BY
SEARCH  BY VOL–+ DISPLAY
```

Channel No.

- The channel No. is displayed as a PR No. For example, channel 1 will be displayed as PR 1. However, channel AV will be displayed as AV.

3. Press MENU –/+ to select the channel No. to be preset.

4. Press VOLUME –/+ to start selection of the TV station.
" >>> " or " <<< " is displayed on the screen.

When a TV station is received, the " >>> " or " <<< " display goes out, and the TV station is preset to the currently selected channel No.

- If you have selected the wrong TV station for preset, repeatedly press the VOLUME –/+ button until the desired TV station is selected.
- To stop MANUAL CH PRESET, press any button other than the VOLUME –/+ button.

If the picture is not clear:
Use the FINE function to fine-tune the TV station.

1. Press MENU ▲/▼ to select FINE.

```
  MANUAL
☞FINE
  SKIP                NO
  SOUND SYSTEM      B/G
  EXIT
SELECT  BY ▼▲    PR 3 VL
PROGRAM BY –+    EXIT BY
FINE    BY VOL–+ DISPLAY
```

2. Hold VOLUME –/+ down to fine-tune the TV station so that the best image is displayed on screen.
" > " or " < " indicates that the TV station is being fine-tuned.

(Continued on next page)

5. Press MENU ▲/▼ to select SOUND SYSTEM.

```
  MANUAL
  FINE
  SKIP                NO
☞SOUND SYSTEM        B/G
  EXIT

SELECT  BY ▼▲     PR 3 VL
PROGRAM BY –+     EXIT BY
CHANGE  BY VOL–+  DISPLAY
```

6. Press VOLUME –/+ to select the appropriate sound system.

- For the sound systems in each country or region, refer to the table "The Broadcasting systems of Each country or Region" below.

7. Press MENU ▲/▼ to select MANUAL.

8. Repeat steps 3 to 7 if you want to preset another TV station to a channel.

9. Press DISPLAY to turn the display off.

The Broadcasting Systems of Each Country or Region

Area	Country or Region	System	
		Colour	Sound
Asia, Middle East	Bahrain, Kuwait, Oman, Qatar, United Arab Emirates, Yemen, etc. Indonesia, Malaysia, Singapore, Thailand, India, etc.	PAL	B/G
	China, Vietnam, etc.	PAL	D/K
	Hong Kong, etc.	PAL	I
	Islamic Republic of Iran, Lebanon, Saudi Arabia, etc.	SECAM	B/G
	Philippine, Taiwan, Myanmar, etc.	NTSC	M
Europe	Russia, etc.	SECAM	D/K
	Czech Republic, Poland, etc.	PAL	D/K
	Germany, Holland, Belgium, etc.	PAL	B/G
	UK, etc.	PAL	I
Oceania	Australia, New Zealand, etc.	PAL	B/G
Africa	Republic of South Africa, etc.	PAL	I
	Nigeria, etc.	PAL	B/G
	Egypt, Morocco, etc.	SECAM	B/G

■ SKIP

You can set undesired channels to be skipped over.
Skip means that the channel cannot be selected by the CHANNEL ∨/∧ buttons nor the CHANNEL SCAN button.

- Channels to which a station has not been preset are automatically set to skip.

1. Press MENU ▲/▼ to display the "MENU 1" menu.

```
        MENU          1
☞LANGUAGE     ENG/РУС/中文
  AUTO CH PRESET
  MANUAL CH PRESET

SELECT  BY ▼▲    EXIT BY
OPERATE BY –+    DISPLAY
```

- If a different menu is displayed, repeatedly press the MENU ▲/▼ button until this menu is displayed.

2. Press MENU ▲/▼ to select MANUAL CH PRESET.

```
        MENU          1
  LANGUAGE     ENG/РУС/中文
  AUTO CH PRESET
☞MANUAL CH PRESET

SELECT  BY ▼▲    EXIT BY
OPERATE BY –+    DISPLAY
```

3. Press MENU –/+.

The sub-menu is displayed.

```
☞MANUAL
  FINE
  SKIP                NO
  SOUND SYSTEM       B/G
  EXIT

SELECT  BY ▼▲     PR 1 VL
PROGRAM BY –+     EXIT BY
SEARCH  BY VOL–+  DISPLAY
```

4. Press MENU ▲/▼ to select SKIP.

```
  MANUAL
  FINE
☞SKIP                NO
  SOUND SYSTEM       B/G
  EXIT                      Channel
SELECT  BY ▼▲     PR 1 VL   No.
PROGRAM BY –+     EXIT BY
YES/NO  BY VOL–+  DISPLAY
```

- The channel No. is displayed as a PR No. For example, channel 1 will be displayed as PR 1. However, channel AV will be displayed as AV.

5. Press MENU –/+ to select the channel you want to skip.

6. Press VOLUME –/+ to select YES.

The channel you selected is set to be skipped.

```
  MANUAL
  FINE
☞SKIP               YES
  SOUND SYSTEM       B/G
  EXIT

SELECT  BY ▼▲     PR 5 VL
PROGRAM BY –+     EXIT BY
YES/NO  BY VOL–+  DISPLAY
```

To cancel the channel skip:
select NO.

7. Repeat steps 5 and 6 if you want to set another channel to skip.

8. Press DISPLAY to turn the display off.

Using the remote control

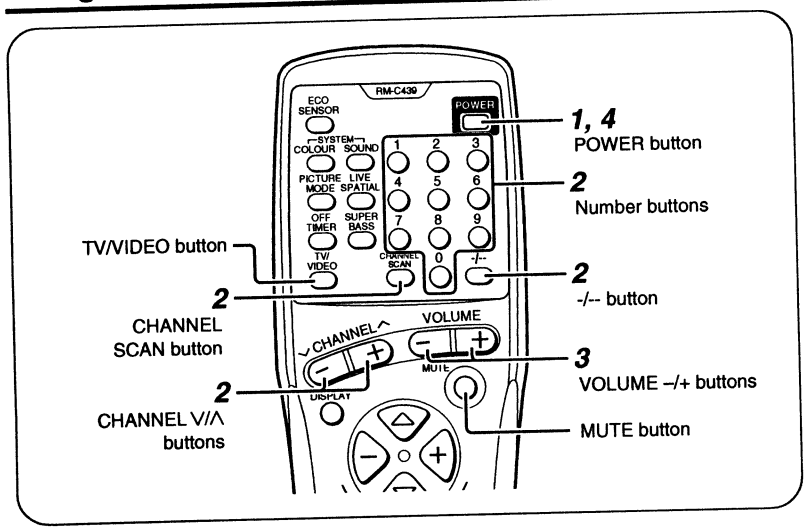

1. Press POWER to turn your TV on.
The POWER lamp changes from red to green.

Note:
- If your TV does not turn on, press the Main power button on the TV then press the POWER button again.
- You can also turn on your TV by pressing any of the following buttons;
  – the CHANNEL V/Λ button
  – the Number buttons
  – the TV/VIDEO button

2. Select a PR channel.

■ **UP/ DOWN selection**
Press CHANNEL V/Λ .

■ **Direct selection**

1. **Repeatedly press the -/- - button to select the desired mode.**

- : 1-digit mode
To select a channel with a 1-digit number.

- - : 2-digit mode
To select a channel with a 1-digit number or a 2-digit number.

2. **Press the Number buttons to select a channel.**

For 1-digit mode:
(example)
Channel 6 → Press 6.

For 2-digit mode:
(example)
Channel 6 → Press 06.
Channel 16 → Press 16.

- When you want to select channel AV, press 0 in 1-digit mode or 00 in 2-digit mode.

■ **CHANNEL SCAN selection**
You can search for the channel you want to view while scanning all of the channels that can be viewed on this TV.

1. **Press CHANNEL SCAN.**
Channels will be scanned in channel No. order.

2. **When the channel that you want to view has been scanned, press CHANNEL SCAN again before scanning for the next channel begins.**

Note:
- UP/DOWN and CHANNEL SCAN selections cannot be selected for channels to which channel skip has been set to YES. (See "SKIP" on page 11.)

If the colour is abnormal:
Repeatedly press the COLOUR SYSTEM button to select the appropriate colour system. For details, see "COLOUR SYSTEM" on page 15.

3. Press VOLUME –/+ to adjust the sound.

To mute the sound temporarily:
Press the MUTE button.
- To return the sound, press the MUTE button again.

If the sound is abnormal:
Repeatedly press the SOUND SYSTEM button to select the appropriate sound system. For details, see "SOUND SYSTEM" on page 15.

4. To turn your TV off, press POWER.
The POWER lamp changes from green to red.

Note:
- We recommend that you press the Main power button on the TV to turn the main power off if you do not plan to use your TV for a long time or if you wish to save energy.

Using the front panel buttons on the TV

1. Press CHANNEL V/Λ to turn your TV on.
The POWER lamp changes from red to green.

Note:
- If your TV does not turn on, press the Main power button and then press the CHANNEL V/Λ button again.

2. Press CHANNEL V/Λ to select a channel.

3. Press VOLUME –/+ to adjust the sound.

4. To turn your TV off, press the Main power button to turn the main power off.
The POWER lamp goes off.

- If you press the Main power button again, your TV turns on immediately. Step 1 is no longer required.

VIEWING IMAGES FROM AN EXTERNAL DEVICE

You can view images from VCRs or other external devices connected to your TV.

1. Repeatedly press TV/VIDEO to select the VIDEO mode according to the jacks to which the external device you want to view is connected.

Each press of the TV/VIDEO button changes the mode as follows.

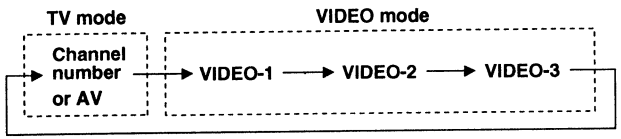

TV mode:
This mode is for viewing TV programmes. Repeatedly press the TV/VIDEO button, or press the CHANNEL V/Λ buttons, or press the number buttons to return to this mode.

To view images from a VCR connected to the TV with only an aerial cable:
Your VCR must be preset to the channel AV of this TV.
Thoroughly read the manual of your VCR, and preset your VCR to the channel AV using the MANUAL CH PRESET function on page 9.
As a result, you can view images from your VCR when you select the channel AV in the TV mode.

If the colour is abnormal:
Repeatedly press the COLOUR SYSTEM button to select the appropriate colour system. For details, see "COLOUR SYSTEM" on page 15.

Note:
- This TV has the AV STEREO function for external stereo devices connected to the TV. If stereo signals are input from a connected external stereo device and TV is in a VIDEO mode, sound can be heard in stereo. (In TV mode, sound is always heard monaurally.)

SOUND AND PICTURE

COLOUR SYSTEM

If the colour is abnormal, select the appropriate colour system. Each press of the COLOUR SYSTEM button changes the colour system as follows.

In TV mode (channel 1 to 99):

In VIDEO mode or channel AV:

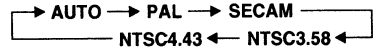

AUTO:
Automatic colour system selection

Notes:
- For the colour systems in each country or region, see the table "The Broadcasting Systems of Each Country or Region" on page 10.
- If the colour is abnormal even though you selected AUTO, change the appropriate colour system manually.

SOUND SYSTEM

If the sound is abnormal, select the appropriate sound system. Each press of the SOUND SYSTEM button changes the sound system as follows.

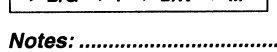

Notes:
- For the sound systems in each country or region, see the table "The Broadcasting Systems of Each Country or Region" on page 10.
- You cannot select any sound system when in VIDEO mode.

PICTURE MODE

You can select one of three picture adjustment modes.
Repeatedly press the PICTURE MODE button to select the desired mode.

BRIGHT:
Heightens contrast and sharpness.

STANDARD:
Standardises picture adjustments.

SOFT:
Softens contrast and sharpness.

LIVE SPATIAL

You can enjoy Surround sound with a "live" effect by using the LIVE SPATIAL (LIVE SPATIAL SURROUND) function. Repeatedly press the LIVE SPATIAL button to select the desired mode.

LIVE SPATIAL:
Live spatial allows you to enjoy normal stereo sound converting it into surround sound with added depth and ambience.

MONO SPATIAL:
Mono spatial allows you to enjoy normal monaural sound with converting it into a stereo-like sound.

OFF:
Returns to normal sound.

Notes:
- LIVE SPATIAL works properly only with stereo sound.
- MONO SPATIAL works properly only with monaural sound.
- The LIVE SPATIAL mode does not work correctly with headphones.

- LIVE SPATIAL is manufactured under license from Desper Products, Inc.

SUPER BASS (AV-K29MX3 only)

You can enjoy a powerful bass sound by using the SUPER BASS (SUPER BASS REFLEX) function.
Press the SUPER BASS button.
To return to normal sound, press the SUPER BASS button again.

Note:
- AV-K29MX1 does not have this function.

Picture/Sound Adjustment

You can adjust the picture and sound as you like.

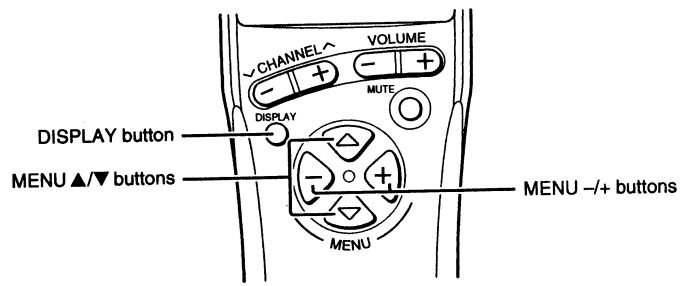

- For details on menu operations using the front control buttons on the TV, see "Menu operations using the front control buttons on the TV" on page 18.

1. Press MENU ▲/▼ to display a menu.

2. Press MENU ▲/▼ repeatedly to display the desired menu.

To adjust the picture:
Display the "MENU 2" menu.

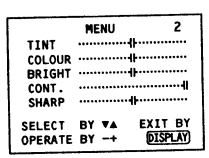

To adjust the sound:
Display the "MENU 3" menu.

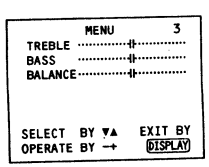

3. Press MENU ▲/▼ to select an item and press MENU –/+ to adjust it.

–	Item	+
Reddish	TINT (tint)	Greenish
Lighter	COLOUR (colour depth)	Deeper
Darker	BRIGHT (brightness)	Brighter
Lower	CONT. (contrast)	Higher
Softer	SHARP (sharpness)	Sharper
Lower	TREBLE (high-frequency sound level)	Higher
Lower	BASS (low-frequency sound level)	Higher
Left	BALANCE (left/right speaker balance)	Right

Notes:
- TINT (tint) is displayed only when viewing images from NTSC3.58 or NTSC4.43 colour systems.

4. Press DISPLAY to turn the display off.

OTHER FEATURES

DISPLAY

You can continuously display the current channel number or VIDEO mode on the screen.
Press the DISPLAY button.
To turn the display off, press the DISPLAY button again.

Note:
- When selecting a VIDEO mode with no input signal, indication of selected VIDEO mode becomes fixed on the screen.

OFF TIMER

You can set this TV to turn off automatically within a specified period of time.
Repeatedly press the OFF TIMER button to select the period of time.
The OFF TIMER lamp lights.

- You can set the period of time a maximum of 120 minutes in 10 minute increments.
- 1 minute before the Off Timer turns off the TV, "GOOD NIGHT!" displays.

To display the remaining time:
Press the OFF TIMER button once.

To cancel the Off Timer:
Press the OFF TIMER button to return the period of time to 00.
The OFF TIMER lamp goes off.

Note:
- The Off Timer does not turn off the main power.

ECO SENSOR

You can adjust this TV so that the screen automatically adjusts to the optimum contrast according to the brightness of your room. This function reduces eye strain and the power consumption of this TV.
Repeatedly press the ECO SENSOR button to select the desired mode.

ECO SENSOR DISPLAY:
The ECO SENSOR function will work. In this mode, the heart mark ♥ indicating the brightness of your room is displayed for several seconds each time the brightness changes. The number of heart marks displayed on screen increases as your room becomes darker. Up to six heart marks are displayed.

ECO SENSOR:
The ECO SENSOR function will work. However, in this mode, the heart mark ♥ will not be displayed even if the brightness of your room changes.

OFF:
The ECO SENSOR function will not work.

- The ECO lamp will light when the ECO SENSOR function is working.

OTHER FEATURES

Menu operations using the front control buttons on the TV

You can operate functions in menus using the front control buttons on the TV without having to use the remote control.

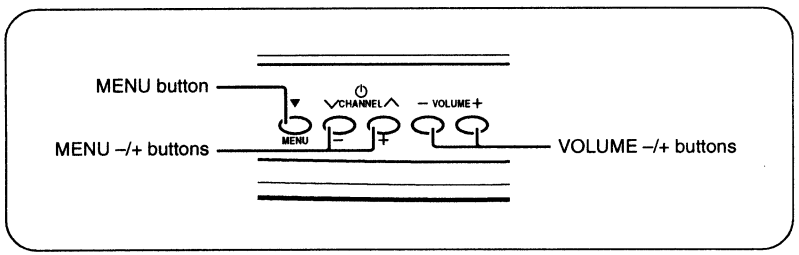

1. Press MENU to display the menu.

If the desired menu is not displayed:
Repeatedly press the MENU button until the desired menu is displayed.

2. Repeatedly press MENU to select the desired function or item.

To select a function or item above the currently selected function or menu:
Repeatedly press the MENU button to proceed to another menu, and then repeatedly press the MENU button again to return to the original menu. Then select the function or item.

3. Press MENU –/+ or VOLUME –/+ to carry out the desired operation.

- For details, see the description for the respective function.

4. Press VOLUME–/+ to turn the menu display off.

If the sub-menu is displayed:
The sub-menu cannot be turned off by the VOLUME –/+ button when it is displayed. Follow the procedure below to turn the sub-menu display off.

1. Press MENU to select EXIT.

```
  MANUAL
  FINE
  SKIP                NO
  SOUND SYSTEM       B/G
 ☞EXIT

SELECT  BY ▼▲     PR 1 VL
PROGRAM BY –+     EXIT BY
EXIT    BY VOL–+  [DISPLAY]
```

2. Press VOLUME –/+ to turn the sub-menu display off.

TROUBLESHOOTING

Important: Review all the instructions in this manual.

Problem	Action
Cannot turn TV on	Press the Main power button (see p.6). Insert the power plug in an AC outlet.
No picture nor sound	Press the TV/VIDEO button to select the correct mode (see p.14). Check the aerial connections.
Remote control inoperable	Replace the batteries (see p.6).
The TV turns off automatically	Press the POWER button to turn the TV on again (see p.12).
Abnormal sound	Repeatedly press the SOUND SYSTEM button to select the appropriate system (see p.15).
Abnormal colour	Adjust the colour and brightness (see p.16). Repeatedly press the COLOUR SYSTEM button to select the appropriate system (see p.15). Repeatedly press the PICTURE MODE button to select STANDARD (see p.15).
Lines or streaks in picture (interference)	Move the components apart until the interference disappears. Reposition the aerial.
Spotted picture (crosstalk)	Move the aerial away from the source of interference. Replace the aerial cable with a coaxial cable, which is less prone to interference.
Double picture (ghost)	Reposition the aerial. Replace with an aerial with good directionality.
Snowy picture (image noise)	Check the aerial connection and aim it correctly. Replace or repair the aerial.
The screen turns blue	Broadcast not being received. Select another channel.

The following are normal occurrences and are not the result of TV malfunctions:

- When you touch the CRT surface, you might feel a slight charge of static electricity. This is because the CRT contains static electricity; it does not affect the human body.
- Your TV may emit a crackling sound due to a sudden change in temperature. There is no problem unless the picture or sound is abnormal.
- When a still bright image (of a white dress, for example) appears on the screen, the image may be coloured. This problem occurs in all CRTs, and when the bright image disappears, the colouration also disappears.
- This TV is equipped with a microcomputer that may operate abnormally due to interference from external devices. If this happens, press the Main power button to turn the main power off and disconnect the power plug from the AC outlet. Then, reconnect the power plug to the AC outlet and press the Main power button again.

SPECIFICATIONS

Model	AV-K29MX3	AV-K29MX1
TV RF systems	B, G, I, D, K, K1, M	
Colour systems	PAL, SECAM, NTSC 3.58 / 4.43 MHz	
Channel and frequencies	VHF low channel (VL) = 46.25 to 168.25 MHz VHF high channel (VH) = 175.25 to 463.25 MHz UHF channel (U) = 471.25 to 863.25 MHz ■ Receives cable channels in mid band (X to Z, S1 to S10), super band (S11 to S20) and hyper band (S21 to S41) .	
Power input	AC120 to 240 V, 50 / 60 Hz (operating AC 90 to 260 V, 50 / 60 Hz)	
Power consumption	Maximum 190 W, Average 110 W	Maximum 170 W, Average 105 W
Screen size (measured diagonally)	Picture tube 73 cm Visible area 68 cm	
Audio output (Rated power output)	15W + 15W	10W + 10W
Speakers	10 cm round × 2 3.5 cm round × 2	10 cm round × 2
External input / output	VIDEO-1, VIDEO-2, VIDEO-3:	VIDEO input (RCA) AUDIO L / R input (RCA)
	LINE OUT:	VIDEO output (RCA) AUDIO L / R output (RCA)
	Headphone jack:	stereo mini jack (dia. 3.5 mm)
Dimensions (W × H × D)	734 mm × 605 mm × 521 mm	734 mm × 583 mm × 521 mm
Weight	40.9 kg	39.0 kg
Accessories	• Remote control unit: RM-C439 × 1 • AA/ R06 / UM-3 dry cell battery × 2	• Remote control unit: RM-C438 × 1 • AA/ R06 / UM-3 dry cell battery × 2

Design and specifications subject to change without notice.

JVC
VICTOR COMPANY OF JAPAN, LIMITED

© 1997 VICTOR COMPANY OF JAPAN, LIMITED

LCT0024-001A-H
0597-T-AB-NV-JMT

MODEL ID. (IDENTIFICATION) / MAIN DIFFERENCE LIST

MODEL IDENTIFICATION

While referring to the illustration given below, identify each model No. on the rating label affixed to the rear cover of TV set.

⚠	PARTS NAME	AV-K29MX3	AV-K29MX3(-A)	AV-K29MX3(-SC)
⚠	RATING LABEL	CM22925-005	CM22880-002	CM22880-004
		INDICATED AV-K29MX3	INDICATED AV-K29MX3(-A)	INDICATED AV-K29MX3(-SC)

MAIN DIFFERENCE LIST

⚠	MODEL No. / Parts Name	AV-K29MX3	AV-K29MX3(-A)	AV-K29MX3(-SC)
⚠	POWER CORD	QMP40D0-200J5	QMPR010-200-E2	QMPR060-200-JC
				←
⚠	INST BOOK	LCT0024-001A-H	←	LCT0026-001A-H
	DIGEST MANUAL	LCT0025-001A-H	←	×
	ADAPTOR PULUG	×	CEMK002-001	×

SPECIFIC SERVICE INSTRUCTIONS

DISASSEMBLY PROCEDURE

REMOVING THE REAR COVER

1. Unplug the power supply cord.
2. Remove the 10 screws marked **Z** as shown in figure.
3. Withdraw the rear cover toward you.

REMOVING THE CHASSIS

- After removing the rear cover.

1. Slightly raise the both sides of the chassis by hand and remove the 2 claws under the both sides of the chassis from the front cabinet.
2. Withdraw the chassis backward.
   (If necessary, take off the wire clamp, connectors etc.)

REMOVING THE AV TERMI. BOARD

- After removing the rear cover.

1. Remove the 2 screws marked **X** as shown in figure.
2. While raising the claw marked **A**, remove the top of the AV TERMI, board slightly in the direction of arrow **B** as shown in Fig.1.
3. Pressing the claws marked **A**, remove the AV TERMI. board toward you marked **B** as shown in Fig. 3.

REMOVING THE FRONT CONTROL BASE

- After removing the rear cover & the chassis.

1. While pushing down the claws marked **C**, remove the CONTROL BASE in the arrow direction marked **D** as shown in Fig. 2.
   (If necessary, take off the wire clamp, connectors etc.)

REMOVING THE DOME SPEAKER BOX

- After removing the rear cover.

1. Remove the 2 screws marked **Y** as shown in figure.
2. Follow the same steps when removing the other hand dome speaker box.

Note:

- When removing the screws marked **Y** of the dome speaker, remove the lower side screw first, and then remove the upper screw.

CHECKING THE PW BOARD

1. To check the back side of the PW Board.
   1) Pull out the chassis. (Refer to REMOVING THE CHASSIS)
   2) Erect the chassis vertically so that you can easily check the back side of the PW Board.

[CAUTION]

- When erecting the chassis, be careful so that there will be no contacting with other PW Board.
- Before turning on power, make sure that the wire connector is properly connected.
- When repair service, connect Deg. coil to DEG. Connector on MAIN PW Board.

WIRE CLAMPING AND CABLE TYING

1. Be sure to clamp the wire.
2. Never remove the cable tie used for tying the wires together. Should it be inadvertently removed, be sure to tie the wires with a new cable tie.

COATING THE SILICON GREASE

- Subsequent to replacement of the CRT and HV transformer or repair of the anode cap, etc. by dismounting them, be sure to coat silicon grease for electrical insulation as shown in Fig.4. Wipe around the anode button with clean and dry cloth. (Fig.4) Coat silicon grease on the section around the anode button. At this time, take care so that any silicon greases dose not stick to the anode button. (Fig.5)

★ **Silicon grease product No. KS - 650N**

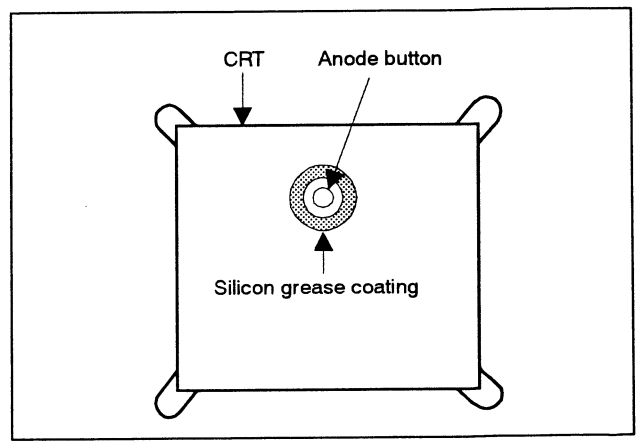

Fig. 4

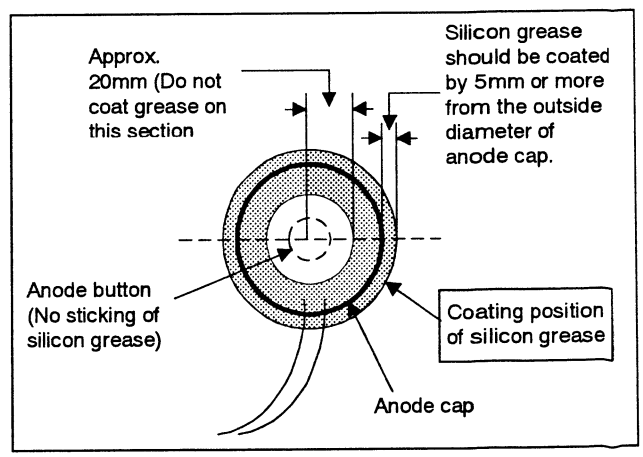

Fig. 5

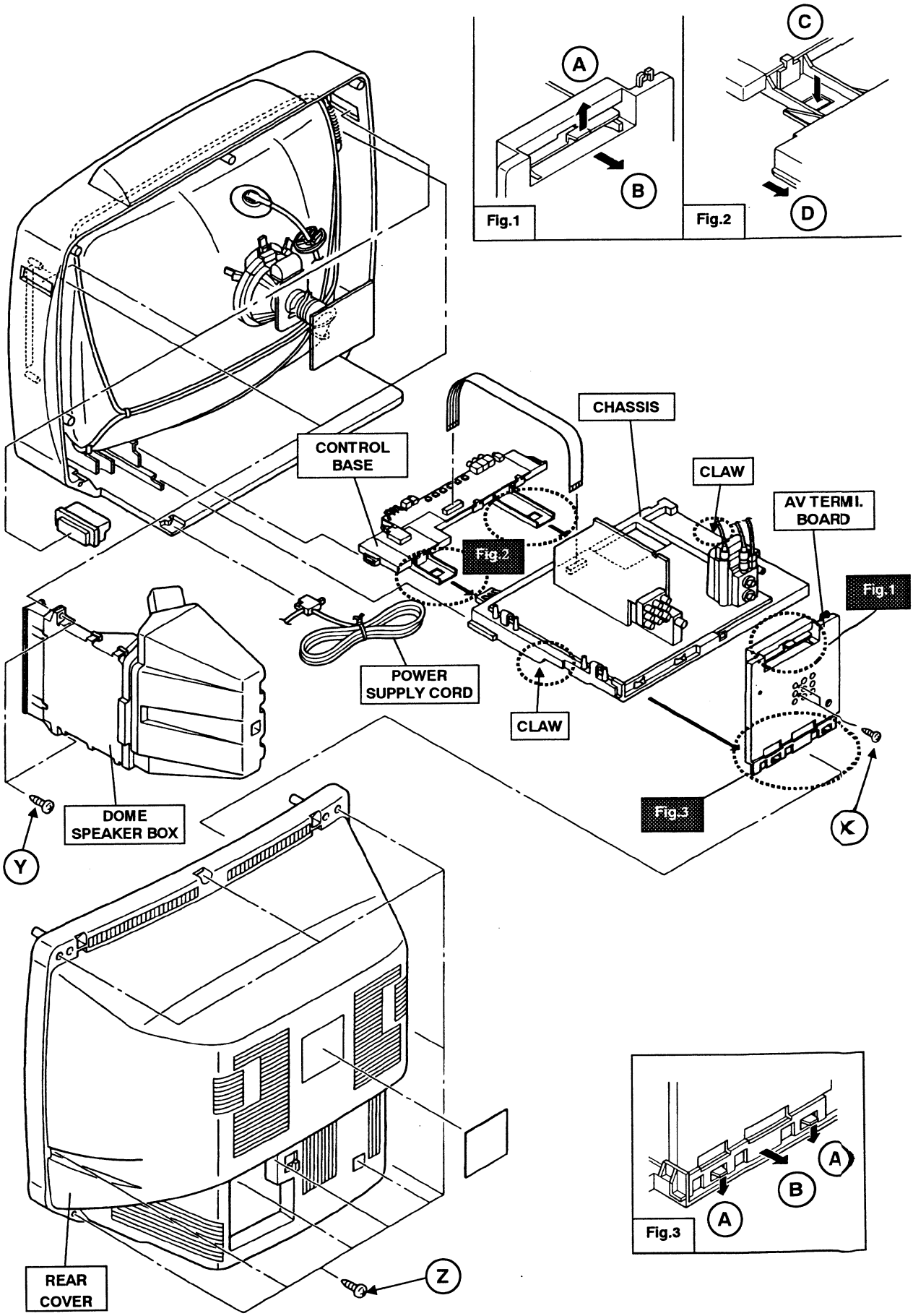
A
B
Fig.1
C
D
Fig.2
CHASSIS
CONTROL BASE
CLAW
AV TERMI. BOARD
Fig.2
Fig.1
POWER SUPPLY CORD
CLAW
Fig.3
K
DOME SPEAKER BOX
Y
Z
REAR COVER
A
B
A
Fig.3

REPLACEMENT OF MEMORY ICs

1. MEMORY ICs

This TV uses memory ICs (EEP-ROM IC). In the memory ICs are memorized data for correctly operating the video and deflection circuits. When replacing memory ICs, be sure to use ICs written with the initial values of data.

2. PROCEDURE FOR REPLACING MEMORY ICs

(1) Power off

Switch the power off and unplug the power code from the wall outlet.

(2) Replace ICs

Be sure to use memory ICs written with the initial data values.

(3) Power on

Plug the power code into the wall outlet and switch the power on.

(4) Check and set SYSTEM CONSTANT SET:

1) Press the DISPLAY key and the PICTURE MODE key of the REMOTE CONTROL UNIT simultaneously.
2) The SERVICE MENU screen of Fig. 1 will be displayed.
3) While the SERVICE MENU on display, press the DISPLAY key and PICTURE MODE key simultaneously, and the SYSTEM CONSTANT SET screen of Fig. 2 will be displayed
4) Check the setting value of the SYSTEM CONSTANT SET of Table 1. If the value is different, select the setting item with the PICTURE / SOUND CENTER key, and set the correct value with the PICTURE / SOUND - / + key.
5) Press the DISPLAY key twice, and return to the normal screen.

(5) Receive channel of setting

Refer to the **OPERATING INSTRUCTIONS** and set the receive channels (channels preset) as described

(6) User Setting

Check the user setting value of Table 2, and if setting value is different, set the correct value.
For setting, refer to the **OPERATING INSTRUCTIONS**.

(7) Setting of SERVICE MENU

Verify the setting items of the SERVICE MENU of Table 3, and reset where necessary.
For setting, refer to the **SERVICE ADJUSTMENTS**.

SERVICE MENU

```
SERVICE MENU

1. IF                    2. V/C
3. VSM PRESET

1-3 SELECT DISP          : EXIT
*******_***SP            V*.**PS
```

Fig. 1

SYSTEM CONSTANT- I

```
SYSTEM CONSTANT SET      1/2

☞ 1. INCH          : 29
  2. COLOUR        : MULTI
  3. VIDEO INPUT   : 3
  4. ECO SENSOR    : YES
  5. SUPER BASS    : YES

▽/△: SELECT
−/+: OPERATE       DISP : EXIT
```

Fig. 2

SYSTEM CONSTANT- II

```
SYSTEM CONSTANT SET      2/2

☞ 6. SPATIALIZER   : YES
  7. VOL. LIMITER  : YES
  8. BLUE BACK     : YES
  9. TEXT          : NO

▽/△: SELECT
−/+: OPERATE       DISP : EXIT
```

Fig. 3

REMOTE CONTROL KEY NAME

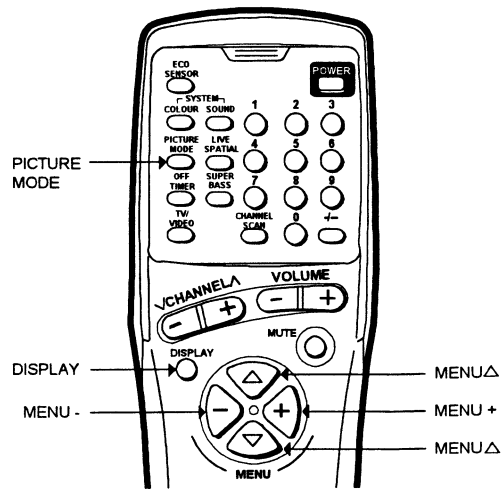

SETTING OF SYSTEM CONSTANT SET

Setting item	Setting content	Setting value
1. INCH	→ 14 → 21 → 25 → 29 →	29
2. COLOUR	→ MULTI → TRIPLE → PAL →	MULTI
3. VIDEO INPUT	→ 1 → 3 →	3
4. ECO SENSOR	→ YES → NO →	YES
5. SUPER BASS	→ YES → NO →	YES
6. SPATIALIZER	→ YES → NO →	YES
7. VOL. LIMITTER	→ YES → NO →	YES
8. BLUE BACK	→ YES → NO →	YES
9. TEXT	→ YES → NO →	NO

Table 1

USER SETTING VALUES

Setting item	Setting value	Setting item	Setting value
SUB POWER	ON	LIVE SPATIAL	OFF
CHANNEL	1 POSITION	OFF TIMER	OFF
CHANNEL PRESET	Refer to OPERATING INSTRUCTION	PICTURE MODE (VSM)	BRIGHT
		ECO SENSOR	OFF
VOLUME	Appropriate sound volume	TREBLE	CENTER
TV/VIDEO	TV	BASS	CENTER
ON SCREEN DISPLAY	POSITION NUMBER DISPLAY	BALANCE	CENTER
COLOUR SYSTEM	PAL	SUPER BASS	ON
SOUND SYSTEM	B / G		

Table 2

SERVICE MENU SETTING ITEMS

Service menu	Setting item	Service menu	Setting item	
1. IF	1. VCO 2. DELAY POINT	**2. V / C**	1. CUT OFF (R / G / B) 2. DRIVE (R / B) 3. BRIGHT 4. CONT. 5. COLOUR (P / S / N) 6. TINT (N3 / N4) 7. BLACK OFFSET (R-Y / B-Y)	8. SHARP 9. TEXT CONT. (R / G / B) 10. H. CENTER 11. V.HEIGHT 12. V. LIN. 13. V. S-CR 14. V. CENTER
3. VSM PRESET (BRIGHT/STD/SOFT)	TINT COLOUR BRIGHT CONT. SHARP			

Table 3

REPLACEMENT OF CHIP COMPONENT

■ CAUTIONS

1. Avoid heating for more than 3 seconds.
2. Do not rub the electrodes and the resist parts of the pattern.
3. When removing a chip part, melt the solder adequately.
4. Do not reuse a chip part after removing it.

■ SOLDERING IRON

1. Use a high insulation soldering iron with a thin pointed end of it.
2. A 30w soldering iron is recommended for easily removing parts.

■ REPLACEMENT STEPS

1. How to remove Chip parts

◆ **Resistors, capacitors, etc.**

(1) As shown in the figure, push the part with tweezers and alternately melt the solder at each end.

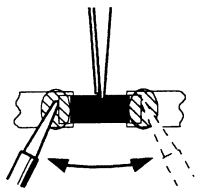

(2) Shift with tweezers and remove the chip part.

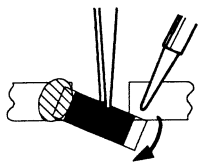

◆ **Transistors, diodes, variable resistors, etc.**

(1) Apply extra solder to each lead.

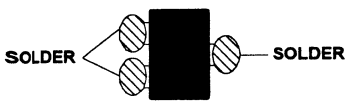

(2) As shown in the figure, push the part with tweezers and alternately melt the solder at each lead. Shift and remove the chip part.

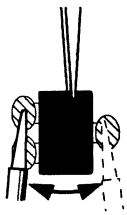

Note : After removing the part, remove remaining solder from the pattern.

2. How to install Chip parts

◆ **Resistors, capacitors, etc.**

(1) Apply solder to the pattern as indicated in the figure.

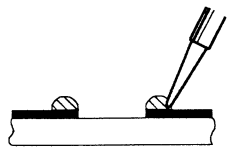

(2) Grasp the chip part with tweezers and place it on the solder. Then heat and melt the solder at both ends of the chip part.

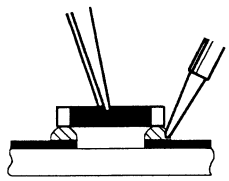

◆ **Transistors, diodes, variable resistors, etc.**

(1) Apply solder to the pattern as indicated in the figure.

(2) Grasp the chip part with tweezers and place it on the solder.

(3) First solder lead **A** as indicated in the figure.

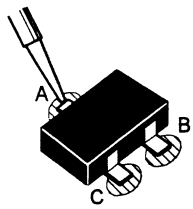

(4) Then solder leads **B** and **C**.

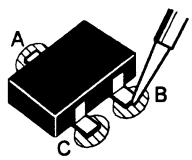

SERVICE ADJUSTMENTS

BEFORE STARTING SERVICE ADJUSTMENT

1. **There are 2 way of adjusting this TV: One is with the REMOTE CONTROL UNIT and the other is the conventional method using adjustment parts and components.**
2. **The setting (adjustment) using the REMOTE CONTROL UNIT is made on the basis of the initial setting values. The setting values which adjust the screen to the optimum condition can be different from the initial setting values.**
3. Turn on the power of the TV and measuring equipment for warming up for at least 30 minutes before staring adjustment.
4. Make sure that connection is correctly made to AC power source.
5. If the receive or input signal is not specified, use the most appropriate signal for adjustment.
6. Never touch parts (such as variable resistors, transformers and condensers) not shown in the adjustment items of this service adjustment.
7. Preparation for adjustment (presetting):
   Unless otherwise specified in the adjustment items, preset the following functions with the REMOTE CONTROL UNIT.

(1) PICTURE MODE (VSM)	BRIGHT
(2) ECO SENSOR	OFF
(3) OFF TIMER	OFF
(4) LIVE SPATIAL	OFF
(5) BALANCE	CENTER
(6) SUPER BASS	ON

MEASUREMENT INSTRUMENT AND FIXTURES

1. DC voltmeter (or digital voltmeter)
2. Oscilloscope
3. Signal generator (Pattern generator) [PAL / SECAM / NTSC]
4. Remote control unit

ADJUSTMENT ITEMS

Adjustment item	Adjustment item
B1 POWER SUPPLY check	VSM PRESET setting
FOCUS adjustment	VIDEO/CHROMA (With DEF.) circuit adjustment
IF circuit adjustment	

BASIC OPERATION OF SERVICE MENU

1. TOOL OF SERVICE MENU OPERATION

Operate the SERVICE MENU with the REMOTE CONTROL UNIT.

2. SERVICE MENU ITEMS

With the SERVICE MENU, various settings (adjustments) can be made, and they are broadly classified in the following items of settings:

- **1. IF** ····· For entering/adjusting the setting values (adjustment values) of the IF circuit.
- **2. V/C** ····· For entering/adjusting the setting values (adjustment values) of the VIDEO/CHROMA circuit and DEFLECTION circuit.
- **3. VSM PRESET** ····· For setting the values of STANDARD, SOFT and BRIGHT. (VSM : video status memory)

3. BASIC OPERATION OF SERVICE MENU

(1) How to enter SERVICE MENU

Press the DISPLAY key and the PICTURE MODE key of the REMOTE CONTROL UNIT simultaneously.
The SERVICE MENU screen of Fig. 1 will be displayed.

SERVICE MENU

```
SERVICE MENU

1. IF          2.V/C
3.VSM PRESET

1-3 : SELECT        DISP : EXIT
********-***SP      V1.**PS
```

Fig. 1

(2) Selection of SUB MENU SCREEN

Press one of the keys 1 ~ 3 of the REMOTE CONTROL UNIT,
and select the SUB MENU SCREEN (See Fig.2) from the SERVICE MENU.
SERVICE MENU → SUB MENU **1. IF / 2. V / C / 3. VSM PRESET**

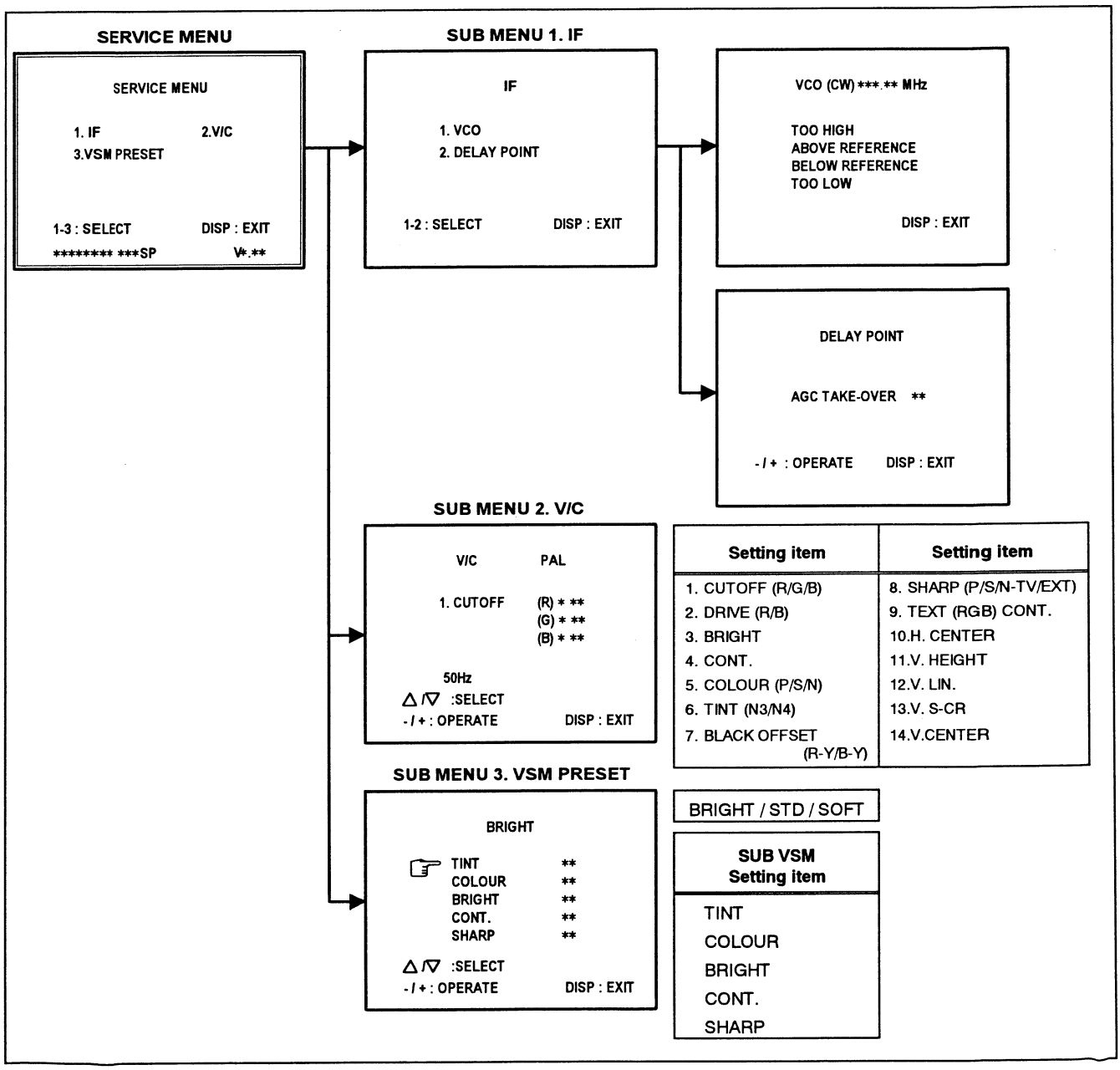

Fig. 2 SUB MENU SCREEN

(3) Method of Setting

* Once the setting values are set, they are memorized automatically.

1) **1. IF**

[1. VCO]

① 1 Key ····· Select **1. IF**.

② 1 Key ····· Select 1. VCO.(CW)

③ The VCO(CW) screen will be displayed in yellow when the AFC voltage is at a certain level and in blue when it is at other levels.

④ DISPLAY Key ····· When this is pressed, you will return to the **SERVICE MENU**.

[2. DELAY POINT]

① 1 Key ····· Select **1. IF**.

② 2 Key ····· Select 2. DELAY POINT.

③ MENU - / + Key ····· Set (adjust) the setting values of the setting items.

④ DISPLAY Key ····· When this is pressed twice, you will return to the **SERVICE MENU**.

2) **2. V/C and 3. VSM PRESET**

① 2 and 3 Keys ····· Select one from **2. V/C and 3. VSM PRESET**

② MENU △ / ▽ key ····· Select setting items.

③ MENU - / + Key ····· Set (adjust) the setting values of the setting items.

④ DISPLAY Key ····· When this is pressed twice, you will return to the **SERVICE MENU**.

(4) Release of SERVICE MENU

After completing the setting, return to the SERVICE MENU, then again press the DISPLAY key.

ADJUSTMENT LOCATIONS

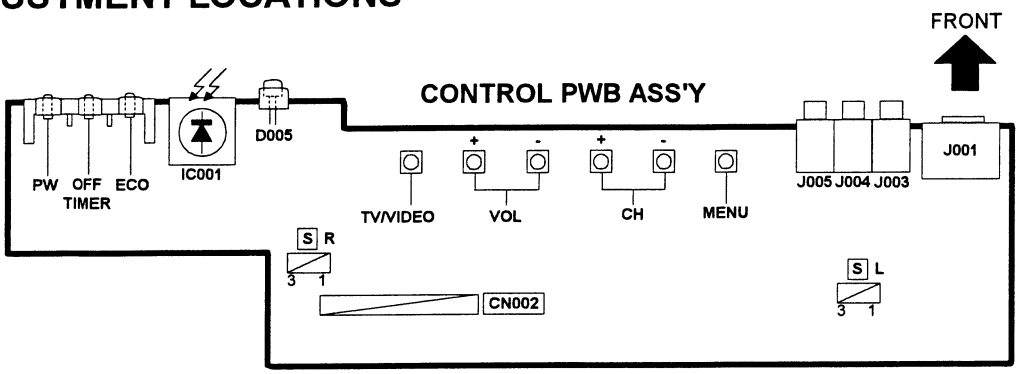

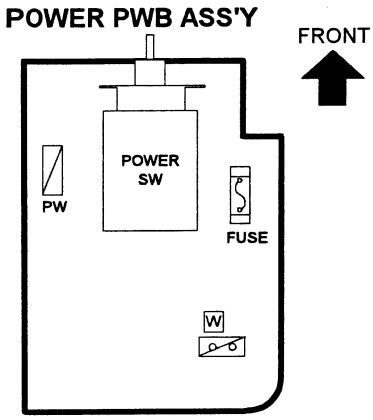

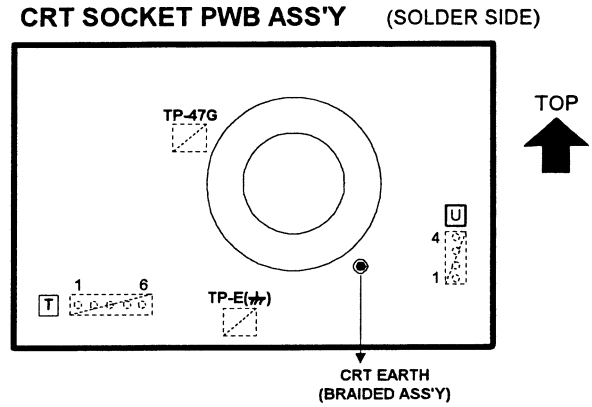

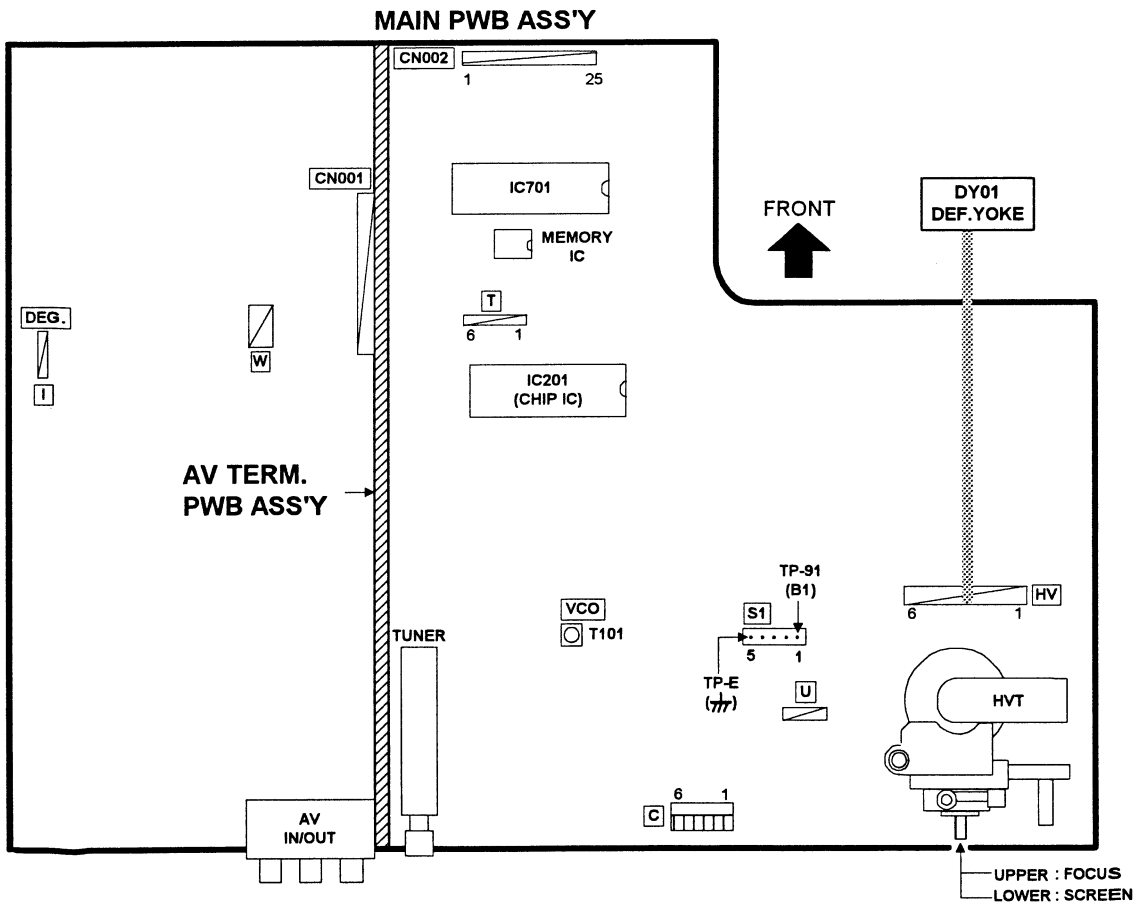

ADJUSTMENTS

B1 POWER SUPPLY CHECK

Item	Measuring instrument	Test point	Adjustment part	Description
Check of B1 Voltage	Signal generator DC Volt-meter	TP-91 (B1) TP-E (⊥)		1. Receive a whole black signal. 2. Connect a DC voltmeter to TP-91(B1) and TP-E (⊥). 3. Make sure that the voltage is DC134 ± 1.5V.

FOCUS ADJUSTMENT

Item	Measuring instrument	Test point	Adjustment part	Description
Adjustment of FOCUS	Signal generator		FOCUS VR [In HVT]	1. Receive a cross-hatch signal. 2. While watching the screen, adjust the FOCUS VR to make the vertical and horizontal lines as fine and sharp as possible. 3. Make sure that when the screen is darkened, the lines remain in good focus.

1. IF CIRCUIT ADJUSTMENT

Item	Measuring instrument	Test point	Adjustment part	Description
Adjustment of VCO(CW)	Remote control unit		VCO(CW) TRANSF.	1. Select 1. IF from the SERVICE MENU. 2. Press the 1 key and select 1. VCO. 3. Select a receivable broadcast channel with the CHANNEL key. 4. Turn the core of VCO TRANSF. Unit the colour of thecharacters TOO HIGH displayed on the screen changes from blue to **yellow**. (Step 1) 5. Then slowly turn the core of VCO TRANSF. To the **left** until the colour of the characters BELOW REFERENCE changes from blue to **yellow**. (Step 3) 6. Press the display key three times to return to normal screen. 7. Perform CHANNEL PRESET again, and make sure that each broadcast is being received properly.

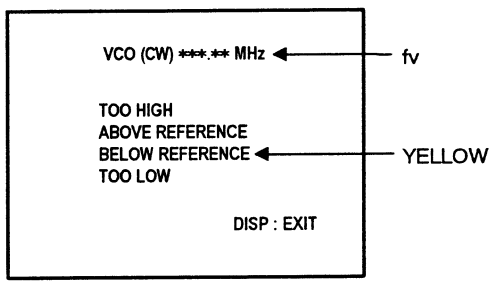

Screen display	Step 1 →	2 →	3
TOO HIGH	**Yellow**	Blue	Blue
ABOVE REFERENCE	Blue	**Yellow**	Blue
BELOW REFERENCE	Blue	Blue	**Yellow**
TOO LOW	Blue	→	Blue

Item	Measuring instrument	Test point	Adjustment part	Description
Adjustment of DELAY POINT (AGC)	**Remote control unit**		**DELAY POINT (AGC TAKE-OVER)**	1. Receive a black and white signal (colour off). 2. Select **1. IF** from the SERVICE MENU. 3. Select **2. DELAY POINT** by pressing the **2** key on the remote control. 4. Adjust the MENU - or + key until video noise disappears. 5. Turn to other channels and make sure that there are not irregularities.

Setting (adjustment) item	Variable range	Initial setting value
DELAY POINT (AGC TAKE-OVER)	0~63	25

2. V / C CIRCUIT ADJUSTMENT (With DEF. Adjustment)

- There are 2 modes of adjustment —— 50Hz mode and 60Hz mode —— depending upon the kind of signals (VERTICAL FREQUENCY 50Hz / 60Hz).
- When adjusted in 50Hz mode, 60Hz mode will be automatically set.

The setting (adjustment) using the REMOTE CONTROL UNIT is made on the basis of the initial setting values.
The setting values which adjust the screen to the optimum condition can be different from the initial setting values.

Setting item \ Colour system		Variable range	Initial setting value							
			PAL		SECAM		NTSC 3.58		NTSC 4.43	
1. CUT OFF (R / G / B)		-128~+127	0		←		←		←	
2. DRIVE (R / B)		-128~+127	0		←		←		←	
3. BRIGHT		-64~+64	-12		←		←		←	
4. CONT.		-58~+28	+12		←		←		←	
5. COLOUR		-60~+67	+1		-1		+13		-2	
6. TINT	TV / VIDEO	-48~+79	——		——		+23 / 0		-4 / 0	
7. BLACK OFFSET (R-Y / B-Y)		-8~+7	——		+3 / -6		——		——	
8. SHARP (DO NOT ADJ.)	TV / VIDEO	-32~+31	-11 / -5 (FIXED)		←		←		←	
9. TEXT (RGB) CONT. (DO NOT ADJ.)		-128~+47	0		←		←		←	
			50Hz	60Hz	50Hz	60Hz	50Hz	60Hz	50Hz	60Hz
10. H. CENTER		-16~+15	-10	-5	←	←	←	←	←	←
11. V. HEIGHT		-64~+63	-23	-4	←	←	←	←	←	←
12. V. LIN		-16~+15	-16	0	←	←	←	←	←	←
13. V. S. CR		-64~+63	+47	-9	←	←	←	←	←	←
14. V. CENTER		0~+127	+60	←	←	←	←	←	←	←

Item	Measuring instrument	Test point	Adjustment part	Description
Adjustment of WHITE BALANCE (Low light)	● **Signal generator** ● **Remote control unit**		**1. CUT OFF (R.)** **CUT OFF (G.)** **CUT OFF (B.)** **SCREEN VR (IN HVT)**	1. Receive a black and white signal (colour off). 2. From the SERVICE MENU, selct 2. V/C. 3. Select **1. CUT OFF** (R), (G) and (B), and set each value to **0**. 4. Press the **1** key of the remote control unit to produce a single horizontal line. 5. Turn the SCREEN VR fully counter-clockwise, then slowly turn it clockwise to where a red, blue and green colour is faintly visible. 6. Use keys **4**~**9** of the remote control unit and adjust the other 2 colours to where the single horizontal line appears white. 7. Turn the **SCREEN VR** to where the single horizontal line glows faintly. 8. Press the **2** key to return to **1. CUT OFF** screen.
Adjustment of WHITE BALANCE (High light)	● **Signal generator** ● **Remote control unit**		**2. DRIVE (R.)** **DRIVE (B.)**	1. Receive a black and white signal (colour off). 2. From the SERVICE MENU, selct **2. V/C**. 3. Select **2. DRIVE (R)** / **(B)** and set each value to **0**. 4. Use the keys **4** and **7** or **6** and **9** to produce a white screen. 5. Press the **2** key to return to **1. CUT OFF** screen.

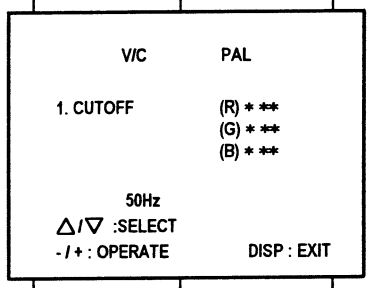

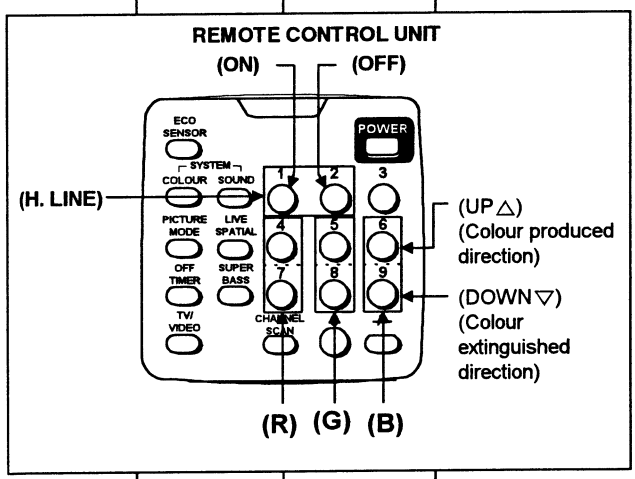

Setting (Adjustment) item		Variable range	Initial setting value
1. CUT OFF	R	-128~+127	0
	G	-128~+127	0
	B	-128~+127	0

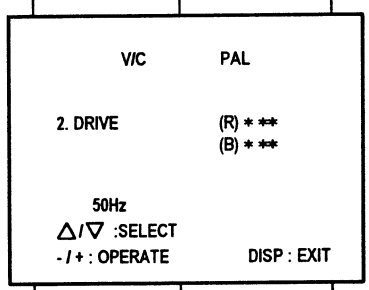

Setting (Adjustment) item		Variable range	Initial setting value
2. DRIVE	R	-128~+127	0
	B	-128~+127	0

Item	Measuring instrument	Test point	Adjustment part	Description
Adjustment of BLACK OFFSET- I (SECAM)	● **Remote control unit**		7. **BLACK OFFSET (R-Y) (B-Y)**	**[Method of adjustment without measuring instrument]** 1. Receive a SECAM broadcast. 2. Select **2. V/C** from SERVICE MENU. 3. Select **7. BLACK OFFSET** with the MENU △ / ▽ key. 4. Set the initial setting value for BLACK OFFSET (R-Y) and (B-Y) with **4** and **7** or **6** and **9** keys of the remote control. 5. If the picture is not the best with the initial setting value, make fine adjustment until you get the best picture. 6. Press the DISPLAY key twice to return to the normal screen.
Adjustment of BLACK OFFSET- II (SECAM)	● **Signal generator** ● **Oscillo-scope** ● **Remote control unit**	**35 PIN (R-Y)** **36 PIN (B-Y)** **IC 201 OF MAIN PWB**	7. **BLACK OFFSET (R-Y) (B-Y)**	**[Method of adjustment using measuring instrument]** 1. Receive a SECAM COLOUR bar signal (full field colour bar 75% white). 2. Select **2. V/C** from SERVICE MENU. 3. Select **7. BLACK OFFSET** with the △ / ▽ key. 4. Connect the oscilloscope between **35** pin of IC 201 and TP-E. 5. By using **4** and **7** keys of the remote control, adjust the BLACK OFFSET (R-Y) so that it becomes the waveform changes from (a) to (b) shown in the figure. 6. Connect the oscilloscope between **36** pin of IC 201 and TP-E. 7. By using **6** and **9** keys of the remote control, adjust the BLACK OFFSET (B-Y) so that it becomes the waveform changes from (c) to (d) shown in the figure. 8. If the picture is not the best with the adjusted picture, make fine adjustment until you get the best picture. 9. Press the DISPLAY key twice to return to the normal screen.

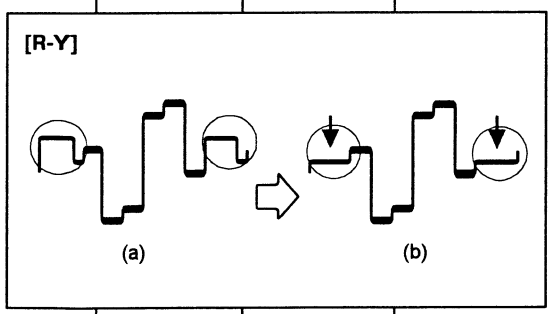

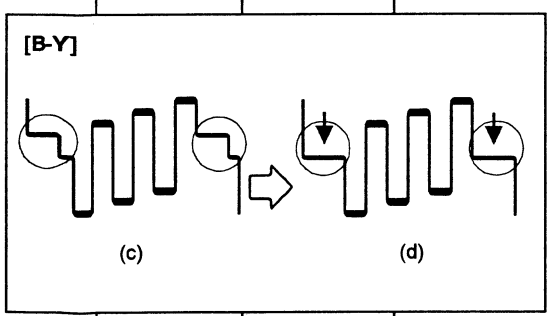

Item	Measuring instrument	Test point	Adjustment part	Description
Adjustment of SUB BRIGHT	● **Remote control unit**		**3. BRIGHT**	1. Receive any broadcast. 2. Select **2. V/C** from SERVICE MENU. 3. Select **3. BRIGHT** with the MENU △ / ▽ key. 4. Set the initial setting value with the MENU - or + key. 5. If the brightness is not the best with the initial set value, make fine adjustment until you get the best brightness.
Adjustment of SUB CONT.	● **Remote control unit**		**4. CONT.**	1. Receive any broadcast. 2. Select **2. V/C** from SERVICE MENU. 3. Select **4. CONT.** with the MENU △ / ▽ key. 4. Set the initial setting value with the MENU - or + key. 5. If the contrast is not the best with the initial set value, make fine adjustment until you get the best brightness.
Adjustment of SUB COLOUR I	● **Remote control unit**		**5. COLOUR**	**[Method of adjustment without using measuring equipment]**
			PAL COLOUR	**(PAL COLOUR)** 1. Receive a PAL broadcast. 2. Select **2. V/C** from the SERVICE MENU. 3. Select **5. COLOUR** with the MENU △ / ▽ key. 4. Set the initial setting value for PAL COLOUR with the MENU - or + key. 5. If the colour is not the best with the initial set value, make fine adjustment until you get the best colour.
			SECAM COLOUR	(SECAM COLOUR) 6. Receive a SECAM broadcast. Make fine adjustment of SECAM COLOUR as previously.
			NTSC 3.58 COLOUR	(NTSC 3.58 COLOUR) 7. Receive a NTSC 3.58MHz broadcast. 8. Make similar fine adjustment of NTSC 3.58 COLOUR as previously.
				(NTSC 4.43 COLOUR) When NTSC 3.58 is set, NTSC 4.43 will be automatically set at the respective values.

Item	Measuring instrument	Test point	Adjustment part	Description
COLOUR setting	• **Signal generator** • **Oscillo-scope** • **Remote control unit**	**TP-47G** **TP-E (⊥)** **[CRT SOCKET PWB]**	**5. COLOUR**	**[Method of adjustment using measuring equipment]**
			PAL COLOUR	**(PAL COLOUR)** 1. Receive a PAL full field colour bar signal (75% white). 2. Select **2. V/C** from SERVICE MENU. 3. Select **5. COLOUR** with the MENU △ / ▽ key. 4. Set the initial setting value of PAL COLOUR with the MENU - or + key. 5. Connect the oscilloscope between TP-47G and TP-E. 6. Adjust PAL COLOUR and bring the value of **(A)** in the illustration to +4V (W & G).
			SECAM COLOUR	**(SECAM COLOUR)** 1. Receive a SECAM full field colour bar signal (75% white). 2. Set the initial setting value of SECAM COLOUR with the MENU - or + key. 3. Adjust SECAM COLOUR and bring the value of **(A)** in the illustration to +4V (W & G).
			NTSC 3.58 COLOUR	**(NTSC 3.58 COLOUR)** 1. Receive a NTSC 3.58 full field colour bar signal (75% white). 2. Set the initial setting value of NTSC 3.58 COLOUR with the MENU - or + key. 3. Adjust NTSC 3.58 COLOUR and bring the value of **(A)** in the illustration to +6V (W & G).
				(NTSC 4.43 COLOUR) When NTSC 3.58 is set, NTSC 4.43 will be automatically set at the respective values.

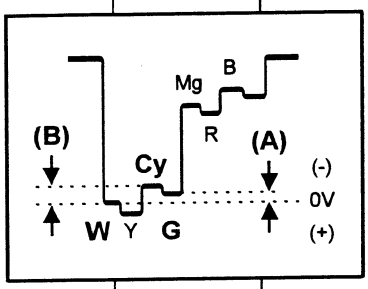

Item	Measuring instrument	Test point	Adjustment part	Description
Adjustment of TINT- I	● **Remote control unit**		**6. TINT**	**[Method of adjustment without measuring equipment]**
			NTSC 3.58 TINT	**(NTSC 3.58 TINT)** 1. Receive a NTSC 3.58 colour bar signal (full field colour bar 75% white). 2. Select **2. V/C** from SERVICE MENU. 3. Select **6. TINT** with the MENU △ / ▽ key. 4. Set the initial setting value of NTSC 3.58 with the MENU - or + key. 5. If you cannot get the best tint with the initial setting value, make fine adjustment until you get the best tint.
				(NTSC 4.43 COLOUR) When NTSC 3.58 is set, NTSC 4.43 will be automatically set at the respective values.
Adjustment of TINT- II	● **Signal generator** ● **Oscillo-scope** ● **Remote control unit**	**TP-47G** **TP-E (⊥)** **[CRT SOCKET PWB]**	**6. TINT**	**[Method of adjustment using measuring equipment]**
			NTSC 3.58 TINT	**(NTSC 3.58 TINT)** 1. Receive a NTSC 3.58 colour bar signal (full field colour bar 75% white). 2. Select **2. V/C** from SERVICE MENU. 3. Select **6. TINT** with the MENU △ / ▽ key. 4. Set the initial setting value of NTSC 3.58 with the MENU - or + key. 5. Connect the oscilloscope between TP-47G and TP-E. 6. Adjust NTSC 3.58 TINT to bring the value of **(B)** in the illustration to +3V (W & Cy).
				(NTSC 4.43 TINT) When NTSC 3.58 is set, NTSC 4.43 will be automaticaly set at the respective values.

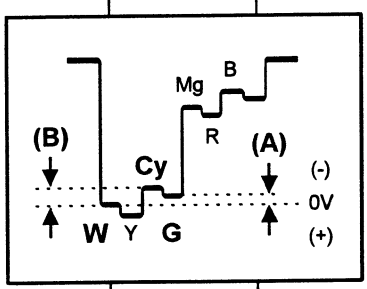

Item	Measuring instrument	Test point	Adjustment part	Description
Adjustment of V. HEIGHT			**11. V. HEIGHT**	1. Receive a cross-hatch signal. 2. Select **2. V/C** from SERVICE MENU. 3. Select **11. V. HEIGHT** with the MENU △ / ▽ key. 4. Set the initial setting value with the MENU - / + key. 5. Adjust V. HEIGHT and make the vertical screen size 92% of the picture size with the MENU + / - keys of remote control unit.
Adjustment of H. CENTER & V. CENTER			**10. H. CENTER** **14. V. CENTER**	1. Receive a circle pattern signal. 2. Select **2. V/C** from SERVICE MENU. 3. Select **10. H. CENTER** with the MENU △ / ▽ key. 4. Set the initial setting value of **10. H. CENTER** with the MENU - / + key. 5. Adjust **10. H. CENTER** to make **A=B** with the - / + key of MENU. 6. Select **14. V. CENTER** with the MENU △ / ▽ key. 7. Set the initial setting value of **14. V. CENTER** with the MENU - / + key. 8. Adjust **14. V. CENTER** to make **C=D** with the - / + key of MENU.
Adjustment of V. LIN. & V. S-CR			**12. V. LIN.** **13. V. S-CR**	1. Receive a cross-hatch signal. 2. Select **2. V/C** from SERVICE MENU. 3. Select **12. V. LIN.** with the MENU △ / ▽ key. 4. Set the initial setting value of **12. V. LIN.** with the MENU - / + key. 5. Adjust **12. V. LIN** to make vertical line at the L and R edges of the screen in parallel. 6. Select **13. V. S-CR** with the MENU△ / ▽ key. 7. Set the initial setting value of **13. V. S-CR** with the MENU - / + key. 8. Adjust **13. V. S-CR** and make the gap between the horizontal lines same.

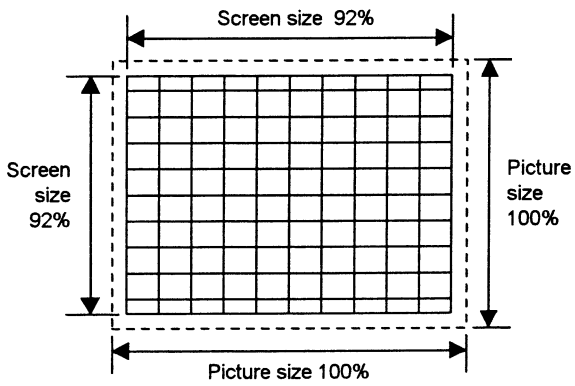

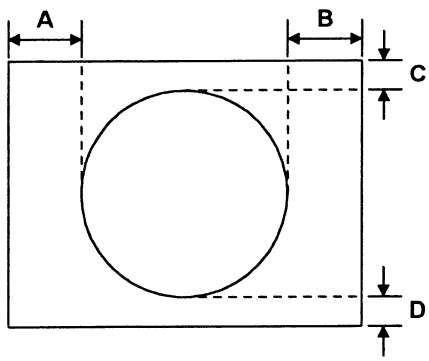

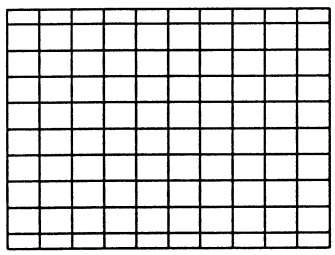

3. VSM ADJUSTMENT

Item	Measuring instrument	Test point	Adjustment part	Description
Setting of VSM PRESET	● **Remote control unit**		**1. TINT** **2. COLOUR** **3. BRIGHT** **4. CONT.** **5. SHARP**	(VSM PRESET) 1. Select **3. VSM PRESET** from the SERVICE MENU. 2. Select BRIGHT with the PICTURE MODE key. 3. Adjust the MENU △ / ▽ and MENU - or + key to bring the set values of **1. TINT** ~ **5. SHARP** to the values shown in the table. 4. Respectively select the VSM PRESET mode for SOFT, and STANDARD, and make similar adjustment as in 3 above.

BRIGHT

☞ TINT **
COLOUR **
BRIGHT **
CONT. **
SHARP **

△/▽ :SELECT
- / + : OPERATE DISP : EXIT

VSM preset mode / VSM Setting item	BRIGHT	STANDARD	SOFT
1. TINT SETTING VALUE	15	←	←
2. COLOUR SETTING VALUE	15	←	←
3. BRIGHT SETTING VALUE	15	←	←
4. CONT. SETTING VALUE	30	19	11
5. SHARP SETTING VALUE	15	←	12

SETTING VALUE OF VSM PRESET

PURITY, CONVERGENCE

PURITY ADJUSTMENT

1. Demagnetize CRT with the demagnetizer.
2. Loosen the retainer screw of the deflection yoke.
3. Remove the wedges.
4. Input a green raster signal from the signal generator, and turn the screen to green raster.
5. Move the deflection yoke backward.
6. Bring the long lug of the purity magnets on the short lug and position them horizontally. (Fig.2)
7. Adjust the gap between two lugs so that the GREEN RASTER will come into the center of the screen. (Fig.3)
8. Move the deflection yoke forward, and fix the position of the deflection yoke so that the whole screen will become green.
9. Insert the wedge to the top side of the deflection yoke so that it will not move.
10. Input a crosshatch signal.
11. Verify that the screen is horizontal.
12. Input red and blue raster signals, and make sure that purity is properly adjusted.

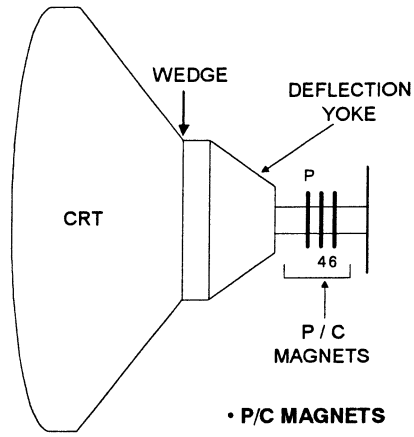

• **P/C MAGNETS**

P : PURITY MAGNET
4 : 4 POLES (convergence magnets)
6 : 6 POLES (convergence magnets)

Fig.1

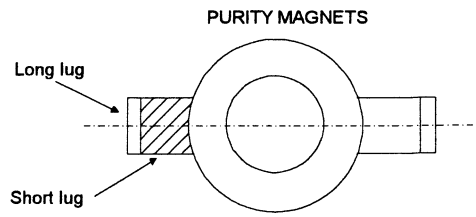

Bring the long lug over the short lug and position them horizontally.

Fig.2

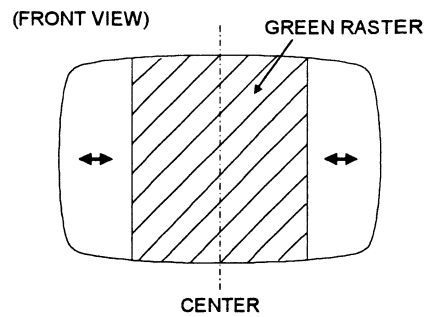

Fig.3

STATIC CONVERGENCE ADJUSTMENT

1. Input a crosshatch signal.
2. Using 4-pole convergence magnets, overlap the red and blue lines in the center of the screen (Fig.1) and turn them to magenta (red/blue).
3. Using 6-pole convergence magnets, overlap the magenta(red/blue) and green lines in the center of the screen and turn them to white.
4. Repeat 2 and 3 above, and make best convergence.

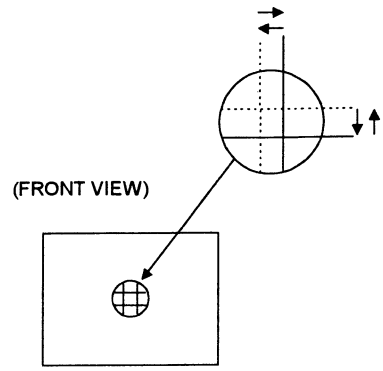

Fig.1

DYNAMIC CONVERGENCE ADJUSTMENT

1. Move the deflection yoke up and down and overlap the lines in the periphery. (Fig. 2)
2. Move the deflection yoke left to right and overlap the lines in the periphery. (Fig. 3)
3. Repeat 1 and 2 above, and make best convergence.

(FRONT VIEW)

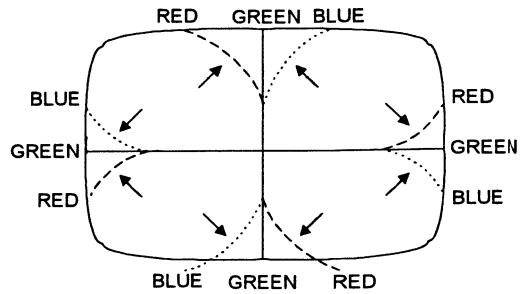

Fig.2

- After adjustment, fix the wedge at the original position.
  Fasten the retainer screw of the deflection yoke.
  Fix the 6 magnets with glue.

(FRONT VIEW)

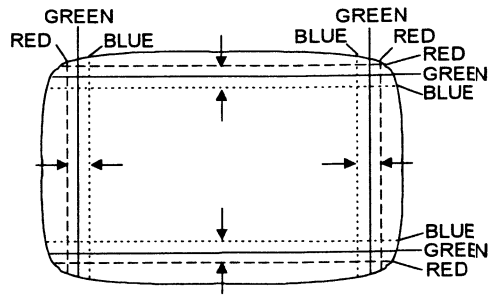

Fig.3

SELF CHECK FUNCTIONS

1. Outline

This model has two self check functions for over-current and X-ray protections. When an abnormality has been detected, the SUB POWER is turned off and the LED (OFF TIMER) turns on and off to inform of the failure. An abnormality is detected by the signal input state of the control line connected to the main microcomputer.

2. Self check indicating function

- At about three seconds after the power is turned on, the self-check function starts to detect over-current and X-ray protections.
  In the case where an abnormality has been detected within the subsequent two seconds, the LED turns on and off, but the SUB-POWER is not turned off.
- When an abnormality has been detected at about five seconds after the power is turned on, the SUB POWER is turned off immediately and the LED (OFF TIMER) turns on and off.

[Indication by LED (OFF TIMER)]

Item	LED ON / OFF intervals	Priority of detection
① Over-current protection	Turning on and off 0.5-second intervals	1
② X-ray protection	Turning on and off 1-second intervals	2

Note : In case of ① + ②, the item ① is indicated.

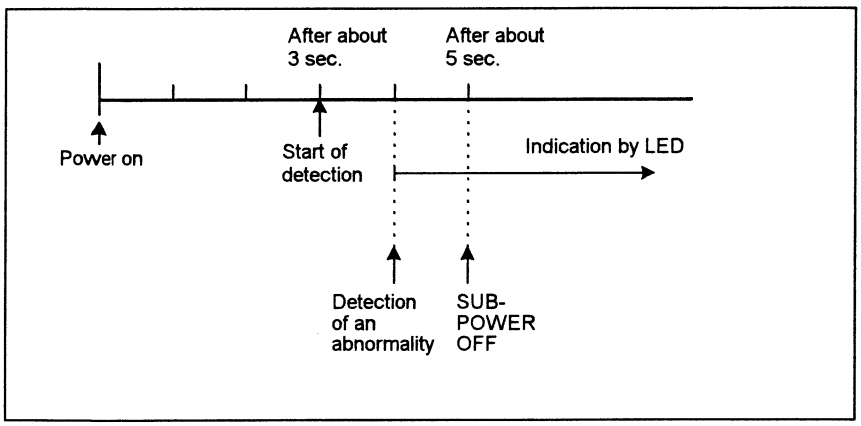

3. Self check items

Check item	Details of detection	Method of detection	State of abnormality
① Over-current protection	Operation of over-current protection circuit	The main microcomputer detects the possible abnormality at 30-msec. intervals and judges the results in every 16 time. Of the 16 times, if NG is detected more than 9 times, it is judged that there is an abnormality	When an abnormality has been detected, the SUB-POWER is turned off. While the SUB-POWER is being turned off, the power key of the remote controller is not operational until the power code is taken out and put in again.
② X-ray protection	Operation of X-ray protection circuit	DITTO	DITTO

PARTS LIST

CAUTION

- The parts identified by the ⚠ symbol are important for the safety . Whenever replacing these parts, be sure to use specified ones to secure the safety .
- The parts not indicated in this Parts List and those which are filled with lines —— in the Parts No. columns will not be supplied .
- P. W. Board Ass'y will not be supplied, but those which are filled with the Parts No. in the Parts No. columns will be supplied .
- As a rule, the resistors and capacitors which are indicated as shown in "HOW TO EXPRESS PARTS NUMBERS OF STANDARD PARTS" are not shown in the list of the parts on the board .
  When ordering the service parts, confirm the resistance/rated power, capacitance/rated voltage, and type of the parts, then order by the part No. indicated according to "HOW TO EXPRESS PARTS NUMBERS OF STANDARD PARTS" .

ABBREVIATIONS OF RESISTORS, CAPACITORS AND TOLERANCES

RESISTORS		CAPACITORS	
C R	Carbon Resistor	C CAP.	Ceramic Capacitor
F R	Fusible Resistor	E CAP.	Electrolytic Capacitor
P R	Plate Resistor	M CAP.	Mylar Capacitor
V R	Variable Resistor	HV CAP.	High Voltage Capacitor
HV. R	High Voltage Resistor	MF CAP.	Metalized Film Capacitor
MF R	Metal Film Resistor	MM CAP.	Metalized Mylar Capacitor
MG R	Metal Glazed Resistor	MP CAP.	Metalized Polystyrol Capacitor
MP R	Metal Plate Resistor	PP CAP.	Polypropylene Capacitor
OM R	Metal Oxide Film Resistor	PS CAP.	Polystyrol Capacitor
CMF R	Coating Metal Film Resistor	TF CAP.	Thin Film Capacitor
UNF R	Non-Flammable Resistor	MPP CAP.	Metalized Polypropylene Capacitor
CH V R	Chip Variable Resistor	TAN. CAP.	Tantalum Capacitor
CH MG R	Chip Metal Glazed Resistor	CH C CAP.	Chip Ceramic Capacitor
COMP. R	Composition Resistor	BP E CAP.	Bi-Polar Electrolytic Capacitor
LPTC R	Linear Positive Temperature Coefficient Resistor	CH AL E CAP.	Chip Aluminum Electrolytic Capacitor
		CH AL BP CAP.	Chip Aluminum Bi-Polar Capacitor
		CH TAN. E CAP.	Chip Tantalum Electrolytic Capacitor
		CH AL BP E CAP.	Chip Tantalum Bi-Polar Electrolytic Capacitor

TOLERANCES									
F	G	J	K	M	N	R	H	Z	P
±1%	±2%	±5%	±10%	±20%	±30%	+30% -10%	+50% -10%	+80% -20%	+100% -0%

HOW TO EXPRESS PARTS NUMBERS OF STANDARD PARTS

■ RESISTOR

Q R □ □ □ □ □ — ○ ○ ○

Kind | Rated Power | Shape | Tolerance | Resistance

Symbol	Part Name
C	COMP.R
D	C R
S	CH MG R

Symbol	Rated Power
0 1	1 w
1 2	1/2 w
1 4	1/4 w
1 6	1/6 w
1 8	1/8 w

Symbol	Shape
1	Straight lead
8	Chip

Indicate with first two-figure expressed by Ω and following 0.
please note that,in case of resistance less than 10 Ω, a letter "R"will be effective as point.

EX.

2.2 Ω	=			2R2
470 Ω	=	47×10^1	→	471
150kΩ	=	15×10^4	→	154

■ CAPACITOR

Q □ □ □ □ □ □ — ○ ○ ○

Kind | Shape | Rated Voltage | Tolerance | Capacitance

Symbol	Part Name
CS	C CAP.
CS	CH C CAP.
ET	E CAP.
FM	M CAP.

5Figure / 6Figure	0	1	2
A		10V	100V
C		16V	160V
D			200V
E		25V	250V
H		50V	500V
J	6.3V	63V	
V		35V	

Indicate with first two-figure expressed by pF and following 0.
Please note that,in case of capacitance less than 10 pF a letter "R" will be effective as point.

EX

5pF	=			5R0
1000pF	=	10×10^2	→	102
47μF	=	47×10^6	→	476

Symbol	Shape
1	Straight lead
1	Leads in the same direction
8	Chip
A	Leads in the same direction (compact part)

CONTENTS

■ USING P.W. BOARD & REMOTE CONTROL UNIT 29
■ REMOTE CONTROL UNIT PARTS LIST 29

■ EXPLODED VIEW PARTS LIST & EXPLODED VIEW 30

■ PRINTED WIRING BOARD PARTS LIST
- MAIN PW BOARD ASS'Y (SCL-1001A-H2) 33
- FRONT CONTROL PW BOARD ASS'Y (SCL-8001A-H2) 37
- POWER SWITCH PW BOARD ASS'Y (SCL-9001A-H2) 37
- AV TERMINAL PW BOARD ASS'Y (SCL0Y001A-H2) 38

■ PACKING 39
■ PACKING PARTS LIST 39

USING P.W. BOARD & REMOTE CONTROL UNIT

Model / P.W.B ASS'Y	AV-K29MX3	AV-K29MX3(-A)	AV-K29MX3(-SC)
MAIN P.W.B	SCL-1001A-H2	←	←
FRONT CONTROL P.W.B	SCL-8001A-H2	←	←
POWER SWITCH P.W.B	SCL-9001A-H2	←	←
AV TERMINAL P.W.B	SCL0Y001A-H2	←	←
REMOTE CONTROL UNIT	RM-C439-1H	←	←

REMOTE CONTROL UNIT PARTS LIST (RM-C439-1H)

⚠ Ref.No.	Part No.	Part Name	Description	Local
	UR52EC1149	BATTERY COVER		

EXPLODED VIEW PARTS LIST I

⚠	Ref. No.	Part No.	Part Name	Description	Local
⚠	V01	A68KRQ58X(D)	PICTURE TUBE(C)		
⚠	DY01	CE20255-00E	DEF YOKE		
⚠	L01	CELD047-002J6N	DEG.COIL		
⚠	T1522	QQH0019-001	FBT		
	1	A48457-3-H	SPRING		
	2	CHGB0020-0B-FH	BRAIDED WIRE		
	3	CHGB0016-0C-FH	BRAIDED WIRE(SUB)		
	4	A75034-B	P.C.MAGNET		
	5	CE40764-00A	WEDGE ASSY	(×4)	
	6	CM36590-001-H	CONTROL DOOR		
	7	CM48001-00A	DOOR LATCH		
	8	CM48280-001-H	OPERATION SHEET		
	9	CM48006-A03-H	JVC MARK		
	10	CM48277-B01-H	REMOCON LENS		
	11	CM23138-B01-H	CONTROL WINDOW		
	12	CM36591-A01-H	CONTROL KNOB		
	13	CM36593-001-H	EE/LED LENS		
	14	CM36592-A01-H	POWER KNOB		
	15	CM35235-003-H	SPRING		
	16	CM12941-C01-VH	CONTROL BASE		
⚠	17	CM47016-001-H	CORD CLAMP		
⚠	18	**QMP40D0-200J5**	**POWER CORD**	**[AV-K29MX3]**	
⚠	18	**QMPR010-200-E2**	**POWER CORD**	**[AV-K29MX3(-A)]**	
⚠	18	**QMPR060-200-JC**	**POWER CORD**	**[AV-K29MX3(-SC)]**	
	19	CHFB125-18BD	FFC WIRE		
	20	CM12669-F02-VH	CHASSIS BASE		
	21	CM12942-B01-H	TERMINAL BOARD		
	22	SBSF3012M-H	TAPPING SCREW	(×2)	
⚠	23	CM12663-003-VH	REAR COVER		
	24	GBSF4016Z-H	TAPPING SCREW	(×10)	
⚠	25	**CM22925-005**	**RATING LABEL**	**[AV-K29MX3]**	
⚠	25	**CM22880-002**	**RATING LABEL**	**[AV-K29MX3(-A)]**	
⚠	25	**CM22880-004**	**RATING LABEL**	**[AV-K29MX3(-SC)]**	
	100	CM12939-D0A-H	FRONT CABI ASSY	Inc.No.101～103	
	101	CM12962-A01-H	TOP COVER		
	102	CM35865-A0B	INSULATOR ASSY	(R)	
	103	CM35865-A0A	INSULATOR ASSY	(L)	

EXPLODED VIEW I

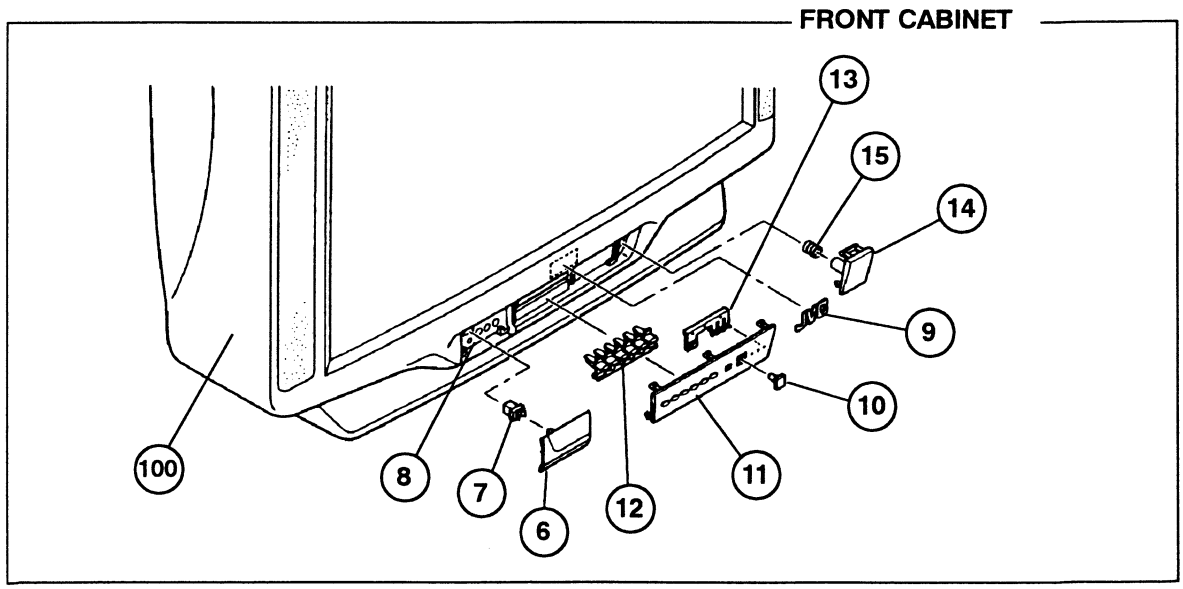

EXPLODED VIEW I

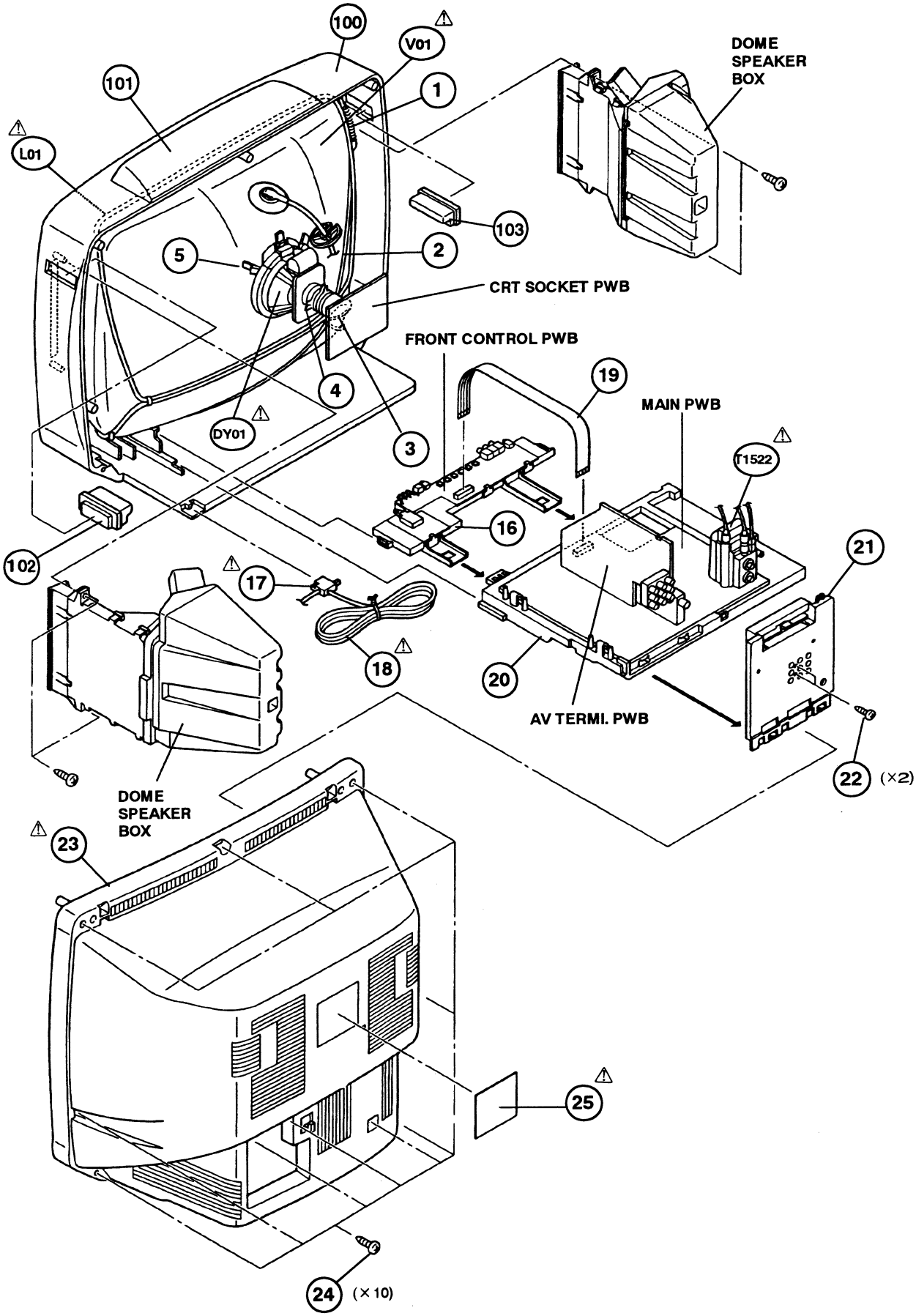

EXPLODED VIEW PARTS LIST II

⚠ Ref. No.	Part No.	Part Name	Description	Local
200	CM12944-001-H	DOME HORN	(×2)	
201	2528MXSP-1SWE	DOME SP ASSY	(×2)Inc.No.300	
202	CEBSF10P-07KJ6	SPEAKER(WO.)	(×2)SP01,SP02	
203	CM12945-B01-H	DOME RING	(R)	
203	CM12945-B02-H	DOME RING	(L)	
204	CM23139-A01-H	REFLECTOR	(R)	
204	CM23139-A02-H	REFLECTOR	(L)	
205	CM12946-B01-H	DOME BOX	(×2)	
300	CEBSS03K-01KJ2	SPEAKER	(×2) Tweeter SP	

EXPLODED VIEW II

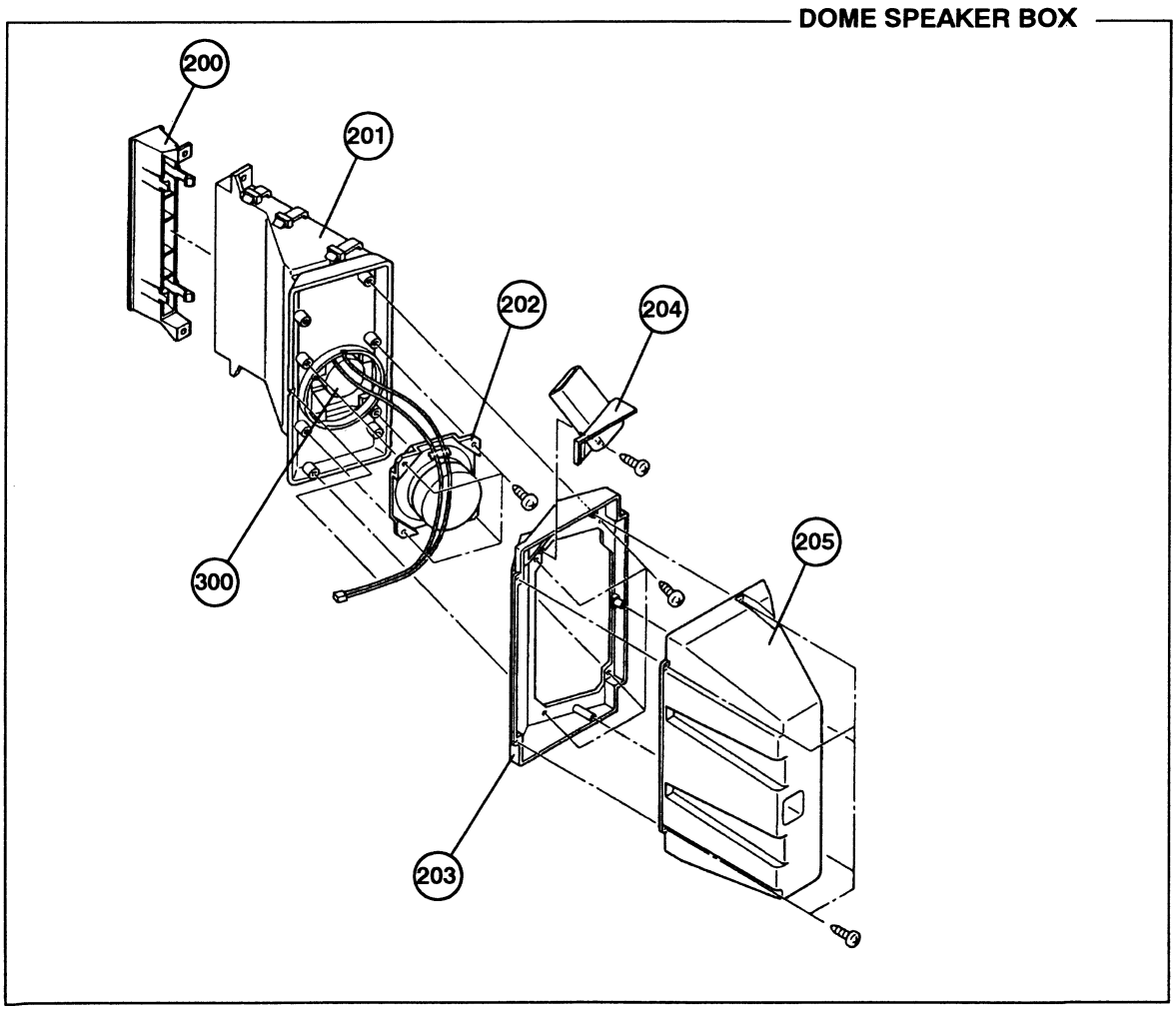

PRINTED WIRING BOARD PARTS LIST

MAIN PW BOARD ASS'Y (SCL-1001A-H2)

⚠	Symbol No.	Part No.	Part Name	Description		Local
	RESISTOR					
	R1321	QRD123J-101SX	C R	100 Ω	1/2W	J
	R1338	QRG029J-183A	OM R	18k Ω	2W	J
	R1339	QRG029J-153A	OM R	15k Ω	2W	J
	R1340	QRZ0107-102Z	C R	1k Ω	1/2W	K
	R1341	QRG029J-183A	OM R	18k Ω	2W	J
	R1342	QRG029J-153A	OM R	15k Ω	2W	J
	R1343	QRZ0107-102Z	C R	1k Ω	1/2W	K
	R1344	QRG029J-183A	OM R	18k Ω	2W	J
	R1345	QRG029J-153A	OM R	15k Ω	2W	J
	R1346	QRZ0107-102Z	C R	1k Ω	1/2W	K
	R1348	QRZ0107-474Z	C R	470k Ω	1/2W	K
	R1431	QRV141F-1002AY	MF R	10k Ω	1/4W	F
	R1440	QRG019J-221S	OM R	220 Ω	1W	J
	R1443	QRD129J-1R0S	C R	1.0 Ω	1/2W	J
	R1506	QRG019J-121S	OM R	120 Ω	1W	J
	R1524-25	QRG029J-222	OM R	2.2k Ω	2W	J
	R1527	QRG029J-103	OM R	10k Ω	2W	J
	R1571	QRF103K-2R2	UNF R	2.2 Ω		
⚠	R1592	QRV141F-1582AY	MF R	15.8k Ω	1/4W	F
⚠	R1593	QRV141F-2201AY	MF R	2.2k Ω	1/4W	F
	R1702	QRB089J-682	NETW.R	6.8k Ω		
	R1725	QRB089J-682	NETW.R	6.8k Ω		
⚠	R1901	QRF154K-1R8	UNF R	1.8 Ω	15W	K
⚠	R1902	QRG039J-683A	OM R	68k Ω	3W	J
	R1903	QRZ0123-820	UNF WW R	82 Ω		
	R1922	QRM059J-R15	MP R	0.15 Ω	5W	J
	R1923	QRX029J-1R2	MF R	1.2 Ω	2W	J
	R1928	QRG029J-823A	OM R	82k Ω	2W	J
⚠	R1929	QRD121J-332SY	C R	3.3k Ω	1/2W	J
	R1930	QRG029J-823A	OM R	82k Ω	2W	J
	R1977	QRG029J-183	OM R	18k Ω	2W	J
	R1978	QRG039J-121A	OM R	120 Ω	3W	J
	R1979	QRG029J-270A	OM R	27 Ω	2W	J
⚠	R1991	QRZ0057-825	C R	8.2M Ω	1W	J
	CAPACITOR					
	C1112	QFLC1HJ-104MZ	M CAP.	0.1 μF	50V	J
	C1114	QFV71HJ-224MZ	TF CAP.	0.22 μF	50V	J
	C1202	QFV71HJ-224MZ	TF CAP.	0.22 μF	50V	J
	C1204	QFLC1HJ-104MZ	M CAP.	0.1 μF	50V	J
	C1301	QFLC1HJ-473MZ	M CAP.	0.047 μF	50V	J
	C1303	QCT25CH-120AZ	C CAP.	12 pF		
	C1304-06	QFLC1HJ-104MZ	M CAP.	0.1 μF	50V	J
	C1322	QFLC1HJ-104MZ	M CAP.	0.1 μF	50V	J
	C1328	QETB2EM-475	E CAP.	4.7 μF	250V	M
	C1329	QCZ0121-102A	C CAP.	1000 pF		
	C1402	QEM61HK-225MZ	E CAP.	2.2 μF	50V	K
	C1421	QFN31HJ-102ZJ1	M CAP.	1000 pF	50V	J
	C1423	QFLC2AJ-393MZ	M CAP.	0.039 μF	100V	J
	C1424-25	QFLC1HJ-104MZ	M CAP.	0.1 μF	50V	J
	C1427	QETB1VM-108	E CAP.	1000 μF	35V	M
	C1428	QETC1VM-107Z	E CAP.	100 μF	35V	M
	C1429	QFN31HJ-152ZJ1	M CAP.	1500 pF	50V	J
	C1430	QFLC2AJ-563MZ	M CAP.	0.056 μF	100V	J
	C1436	QFLC1HJ-104MZ	M CAP.	0.1 μF	50V	J
	C1437	QFN31HJ-152ZJ1	M CAP.	1500 pF	50V	J
	C1507	QFLC1HJ-103MZ	M CAP.	0.01 μF	50V	J
	C1523	QEHC2CM-105MZ	E CAP.	1 μF	160V	M
⚠	C1524	QFZ0117-4001L	MPP CAP.	4000 pF	1.5kVH	±2.5%
⚠	C1525	QFZ0117-8601S	MPP CAP.	8600 pF	1.4kVH	±2.5%
⚠	C1526	QFN32DK-124J1	M CAP.	0.12 μF	200V	K
⚠	C1527	QFZ0119-474L	MPP CAP.	0.47 μF	200V	±3%
	C1529	QETC2EM-475Z	E CAP.	4.7 μF	250V	M
	C1552	QETN1EM-108Z	E CAP.	1000 μF	25V	M
	C1554	QETN1EM-108Z	E CAP.	1000 μF	25V	M

⚠ Symbol No.	Part No.	Part Name	Description	Local
CAPACITOR				
C1557	QETC2EM-106Z	E CAP.	10 μF 250V	M
C1571	QEZ0203-107	E CAP.	100 μF 160V	M
C1581	QFLC1HJ-104MZ	M CAP.	0.1 μF 50V	J
C1592	QETC2AM-106Z	E CAP.	10 μF 100V	M
C1602	QFLC1HJ-223MZ	M CAP.	0.022 μF 50V	J
C1603-04	QCT25CH-470AZ	C CAP.	47 pF 50V	J
C1667-68	QEN61CM-106Z	BP E CAP.	10 μF 16V	M
C1673	QEN61CM-106Z	BP E CAP.	10 μF 16V	M
C1675	QEN61CM-106Z	BP E CAP.	10 μF 16V	M
C1680	QFV71HJ-224MZ	TF CAP.	0.22 μF 50V	J
C1682-83	QFV71HJ-224MZ	TF CAP.	0.22 μF 50V	J
C1684-85	QETB1VM-108	E CAP.	1000 μF 35V	M
C1686	QFV71HJ-224MZ	TF CAP.	0.22 μF 50V	J
C1702	QFLC1HJ-104MZ	M CAP.	0.1 μF 50V	J
C1704	QFLC1HJ-103MZ	M CAP.	0.01 μF 50V	J
C1708	QFN31HJ-102ZJ1	M CAP.	1000 pF 50V	J
C1714	QFLC1HJ-103MZ	M CAP.	0.01 μF 50V	J
C1715	QFLC1HJ-473MZ	M CAP.	0.047 μF 50V	J
⚠ C1902	QFZ9040-104N	MF CAP.	0.1 μF AC275V	M
⚠ C1903	QFZ9040-104N	MF CAP.	0.1 μF AC275V	M
⚠ C1904	QCZ9033-102A	C CAP.	1000 pF AC400V	K
⚠ C1905	QCZ9033-102A	C CAP.	1000 pF AC400V	K
⚠ C1906	QCZ9033-102A	C CAP.	1000 pF AC400V	K
⚠ C1907	QCZ9033-102A	C CAP.	1000 pF AC400V	K
⚠ C1909	QEZ0111-337R	E CAP.	330 μF 400V	M
C1921	QCZ0122-560A	C CAP.	560 pF 2kV	K
C1924	QETC1VM-107Z	E CAP.	100 μF 35V	M
C1925	QFN31HJ-102ZJ1	M CAP.	1000 pF 50V	J
C1926	QFN31HJ-272ZJ1	M CAP.	2700 pF 50V	J
C1930	QCZ0122-271U	C CAP.	270 pF 2kV	K
C1931	QCZ0122-271U	C CAP.	270 pF 2kV	K
C1941	QCZ0122-561A	C CAP.	560 pF 2kV	K
⚠ C1942	QEZ0203-227	E CAP.	220 μF 160V	M
C1945	QETN1EM-108Z	E CAP.	1000 μF 25V	M
C1950	QFLC1HJ-104MZ	M CAP.	0.1 μF 50V	J
⚠ C1991	QCZ9079-471	C CAP.	470 pF AC250V	K
⚠ C1992	QCZ9079-471	C CAP.	470 pF AC250V	K
⚠ C1993	QCZ9079-222	C CAP.	2200 pF AC250V	K
TRANSFORMER				
T1101	CELT001-303J3	C.WAVE TRANSF.		
T1521	CE42034-002	H.DRIVE TRANSF.		
⚠ T1522	QQH0019-001	FBT		
⚠ T1921	CETS088-001JD	SW TRANSF.		
COIL				
L1001-02	CELP057-8R2Z	PEAKING COIL	8.2 μH	
L1101	CELP037-2R2	PEAKING COIL	2.2 μH	
L1104	CELP057-150Z	PEAKING COIL	15 μH	
L1105	CELP057-8R2Z	PEAKING COIL	8.2 μH	
L1106	CELP057-100Z	PEAKING COIL	10 μH	
L1301-02	CELP057-470Z	PEAKING COIL	47 μH	
L1522	QQR0523-002	LINIARITY COIL		
L1551	CELC901-038J6	HEATER CHOKE		
L1601	CELP057-120Z	PEAKING COIL	12 μH	
L1701	CELP057-4R7Z	PEAKING COIL	4.7 μH	
L1703-06	CELP057-100Z	PEAKING COIL	10 μH	
L1941-42	CELC058-820Z	CHOKE COIL		
DIODE				
D1001	MTZJ33(A)-T2	ZENER DIODE		
D1101-02	1SS85-T2	SI.DIODE		
D1104	1SS133-T2	SI.DIODE		
D1203	1SS133-T2	SI.DIODE		
D1321	1SS133-T2	SI.DIODE		
D1323-25	1SS133-T2	SI.DIODE		
D1326	MTZJ5.1(B)-T2	ZENER DIODE		
D1421	MTZJ8.2(B)-T2	ZENER DIODE		

⚠ Symbol No.	Part No.	Part Name	Description	Local
D I O D E				
D1423	1SR124-400A-T2	SI.DIODE		
D1424	1SS133-T2	SI.DIODE		
D1427	1SS133-T2	SI.DIODE		
D1428	MTZJ22(B)-T2	ZENER DIODE		
D1501	MTZJ8.2(B)-T2	ZENER DIODE		
D1502	MTZJ5.1(B)-T2	ZENER DIODE		
D1504	MTZJ22(B)-T2	ZENER DIODE		
D1521	RH3G-C1	SI.DIODE		
D1522	RU30-C1	SI.DIODE		
D1523	RGP10J(C1)-T3	SI.DIODE		
D1551-52	RU3AM-LFC4	SI.DIODE		
D1553	RH1S-T3	SI.DIODE		
D1582	RGP10J(C1)-T3	SI.DIODE		
D1591	MTZJ7.5S-T2	ZENER DIODE		
D1592	1SR35-100A-T2	SI.DIODE		
D1701-03	1SS133-T2	SI.DIODE		
D1705	1SS133-T2	SI.DIODE		
D1706-09	MTZJ8.2(B)-T2	ZENER DIODE		
D1710-11	1SS133-T2	SI.DIODE		
D1739	MTZJ8.2(B)-T2	ZENER DIODE		
⚠ D1901	D3SB60	BRIDGE DIODE		
D1921-22	1SR124-400A-T2	SI.DIODE		
D1923	MTZJ15(A)-T2	ZENER DIODE		
D1924	1SR124-400A-T2	SI.DIODE		
D1926	RU1C-LFC4	SI.DIODE		
D1927	MTZJ6.8(A)-T2	ZENER DIODE		
D1928	1SS133-T2	SI.DIODE		
D1929	MTZJ15(A)-T2	ZENER DIODE		
D1930	1SR124-400A-T2	SI.DIODE		
D1941	RU30A-C1	SI.DIODE		
D1942	RU3YX-LFC4	SI.DIODE		
D1943	RU30Y-C1	SI.DIODE		
D1944	MTZJ6.2(B)-T2	ZENER DIODE		
D1981-83	1SS133-T2	SI.DIODE		
T R A N S I S T O R				
Q1101	2SC5083(L-P)-T	SI.TRANSISTOR		
Q1102	DTC124ESA-T	DIGI.TRANSISTOR		
Q1103	2SC1740S(QR)-T	SI.TRANSISTOR		
Q1104	2SA933AS(QR)-T	SI.TRANSISTOR		
Q1105-06	DTC124ESA-T	DIGI.TRANSISTOR		
Q1107	2SC1740S(QR)-T	SI.TRANSISTOR		
Q1108-09	2SA933AS(QR)-T	SI.TRANSISTOR		
Q1110-11	DTC124ESA-T	DIGI.TRANSISTOR		
Q1201	2SA933AS(QR)-T	SI.TRANSISTOR		
Q1321	2SC4544-C1	SI.TRANSISTOR		
Q1322	2SC1740S(QR)-T	SI.TRANSISTOR		
Q1323	2SC4544-C1	SI.TRANSISTOR		
Q1324	2SC1740S(QR)-T	SI.TRANSISTOR		
Q1325	2SC4544-C1	SI.TRANSISTOR		
Q1326	2SC1740S(QR)-T	SI.TRANSISTOR		
Q1327	2SA933AS(QR)-T	SI.TRANSISTOR		
Q1328	2SC1740S(QR)-T	SI.TRANSISTOR		
Q1422-24	2SC1740S(QR)-T	SI.TRANSISTOR		
Q1430-31	2SC1815(YG)-T	SI.TRANSISTOR		
Q1521	BSN274	F.E.T.		
⚠ Q1522	2SD2499-LB	SI.TRANSISTOR	H.OUT	
Q1523	2SC1815(YG)-T	SI.TRANSISTOR		
Q1601-02	2SC1740S(QR)-T	SI.TRANSISTOR		
Q1603	DTC124ESA-T	DIGI.TRANSISTOR		
Q1604	2SC1740S(QR)-T	SI.TRANSISTOR		
Q1605	DTC124ESA-T	DIGI.TRANSISTOR		
Q1607	2SA933AS(QR)-T	SI.TRANSISTOR		
Q1608	2SC1740S(QR)-T	SI.TRANSISTOR		
Q1681	DTC323TS-T	DIGI.TRANSISTOR		
Q1682	2SA933AS(QR)-T	SI.TRANSISTOR		

⚠	Symbol No.	Part No.	Part Name	Description	Local
	TRANSISTOR				
	Q1683	DTC323TS-T	DIGI.TRANSISTOR		
	Q1701	2SA933AS(QR)-T	SI.TRANSISTOR		
	Q1702-03	2SC1740S(QR)-T	SI.TRANSISTOR		
	Q1921	2SA933AS(QR)-T	SI.TRANSISTOR		
	Q1941	2SC1740S(QR)-T	SI.TRANSISTOR		
	Q1942	DTC144GSA-T	DIGI TRANSISTOR		
	Q1971	2SA966(OY)-T	SI.TRANSISTOR		
	Q1972	DTC144GSA-T	DIGI TRANSISTOR		
	Q1981	2SA933AS(QR)-T	SI.TRANSISTOR		
	IC				
	IC1101	M52342SP	I.C.(MONO-ANA)		
	IC1201	TB1226BN	I.C.		
	IC1421	LA7840	I.C.(MONO-ANA)		
	IC1680	AN5275	I.C.(MONO-ANA)		
	IC1701	M37212M6-109SP	MICON IC		
	IC1702	AT24C04-K29MX3	I.C.	(SERVICE)	
	IC1703	L78LR05E-MA	I.C.(MONO-ANA)		
⚠	IC1921	STR-F6655	I.C.		
⚠	IC1941	SE135N	I.C.(HYBRID)		
	IC1971	AN7812F	I.C.(MONO-ANA)		
	IC1972	AN7809F	I.C.(MONO-ANA)		
	IC1973	AN7805F	I.C.(MONO-ANA)		
	IC1974	AN78L09	I.C.(MONO-ANA)		
	OTHERS				
	CF1101	MKT39.5MA100P	CERAMIC FILTER		
	CF1102	MKT30.9MA100P	CERAMIC FILTER		
	CF1103	TPS4.5MC	CERAMIC FILTER		
	CF1104	TPS5.5MW	CERAMIC FILTER		
	CF1105	TPS6.5MB	CERAMIC FILTER		
	CF1106	TPSH6.0MB	CERAMIC FILTER		
	CF1601	SFSH4.5MCB	CERAMIC FILTER		
	CF1604	QAX0336-001	CERAMIC FILTER		
	CF1606	QAX0337-001	CERAMIC FILTER		
	CF1608	QAX0338-001	CERAMIC FILTER		
	CN1002	CHC108N-25T-A	FFC CONNECTOR		
⚠	CP1942	ICP-N75-Y	I.C.PROTECT		
⚠	CP1943	ICP-N75-Y	I.C.PROTECT		
⚠	CP1944	ICP-N5-Y	I.C.PROTECT		
	EF1201	CE42142-222Z	EMI FILTER		
⚠	FR1551	QRZ0054-4R7M	F R	4.7 Ω 1/4W	J
⚠	FR1552	QRH017J-3R9M	F R	3.9 Ω 1W	J
⚠	FR1553	QRH017J-3R9M	F R	3.9 Ω 1W	J
⚠	FR1554	QRZ0055-150M	F R	15 Ω 1/2W	J
⚠	FR1921	QRD129J-6R8S	C R	6.8 Ω 1/2W	J
	K1421	CE41433-001Z	BEADS CORE		
	K1921	CE41433-001Z	BEADS CORE		
	K1923	CE41433-001Z	BEADS CORE		
	K1941-43	CE42050-001Z	CORE		
⚠	LF1902	CELF001-002J1	LINE FILTER		
⚠	PC1921	TLP721F(GR)	I.C.(PH.COUPLER)		
	SF1101	QAX0323-001	SAW FILTER		
	SF1102	QAX0325-001	SAW FILTER		
⚠	SK1351	CE42535-001J1	CRT SOCKET		
⚠	TH1901	QAD0101-9R0	P THERMISTOR		
	TU1001	CEEM574-B01	TUNER		
	X1301	QAX0305-001Z	CRYSTAL		
	X1701	CST8.00MTW	CER.RESONATOR		

FRONT CONTROL PW BOARD ASS'Y (SCL-8001A-H2)

⚠ Symbol No.	Part No.	Part Name	Description	Local
CAPACITOR				
C8016	QFLC1HJ-104MZ	M CAP.	0.1μF 50V J	
DIODE				
D8001	SLR-342DU-T16	L.E.D.(ORG)		
D8002	SLR-342VR-T16	L E D(RED)		
D8004	SPR-39MVWF	L.E.D.		
D8005	P1201	C.D.S.		
D8006-07	1SS133-T2	SI.DIODE		
D8402-03	MTZJ10(B)-T2	ZENER DIODE		
TRANSISTOR				
Q8001	DTC124ESA-T	DIGI.TRANSISTOR		
Q8002-03	DTA124ESA-T	DIGI.TRANSISTOR		
Q8005	2SC1740S(QR)-T	SI.TRANSISTOR		
Q8006-07	DTA124ESA-T	DIGI.TRANSISTOR		
IC				
IC8001	HC-337MN	IFR DETECT UNIT		
OTHERS				
	CM35921-A04-H	CDS HOLDER		
	CM36626-B01-H	LED HOLDER		
CN8002	CHC108N-25T-A	FFC CONNECTOR		
J8001	QMS3004-C01	HEADPHONE JACK		
J8003	CEMN065-001	PIN JACK		
J8004	CEMN072-002	PIN JACK		
J8005	CEMN072-003	PIN JACK		
S8002	QSP1A11-C18Z	PUSH SWITCH	CH+	
S8003	QSP1A11-C18Z	PUSH SWITCH	TV/VIDEO	
S8004	QSP1A11-C18Z	PUSH SWITCH	CH-	
S8005	QSP1A11-C18Z	PUSH SWITCH	VOL+	
S8006	QSP1A11-C18Z	PUSH SWITCH	MENU	
S8007	QSP1A11-C18Z	PUSH SWITCH	VOL-	

POWER SWITCH PW BOARD ASS'Y (SCL-9001A-H2)

⚠ Symbol No.	Part No.	Part Name	Description	Local
CAPACITOR				
⚠ C9901	QFZ9040-104N	MF CAP.	0.1μFAC275V M	
OTHERS				
	CEMG002-001Z	FUSE CLIP		
⚠ F9901	QMF51E2-4R0J4	FUSE	4A	
⚠ LF9901	QQR0673-001	LINE FILTER		
⚠ S9901	QSP4K21-C01	PUSH SWITCH	POWER SW	
⚠ VA9901	ERZV10V621CS	VARISTOR		

AV TERMINAL PW BOARD ASS'Y (SCL0Y001A-H2)

⚠ Symbol No.	Part No.	Part Name	Description			Local
CAPACITOR						
C0202	QEN61CM-106Z	BP E CAP.	10 μF	16V	M	
C0203	QFLC1HJ-103MZ	M CAP.	0.01 μF	50V	J	
C0301-02	QEN61CM-106Z	BP E CAP.	10 μF	16V	M	
C0305	QCT25CH-680AZ	C CAP.	68 p F	50V	J	
C0307	QFLC1HJ-103MZ	M CAP.	0.01 μF	50V	J	
C0611-12	QEN61CM-106Z	BP E CAP.	10 μF	16V	M	
C0664-65	QFLC1HJ-823MZ	M CAP.	0.082 μF	50V	J	
C0666-71	QFLC1HJ-104MZ	M CAP.	0.1 μF	50V	J	
C0675	QFLC1HJ-393MZ	M CAP.	0.039 μF	50V	J	
C0680	QEN61CM-226Z	BP E CAP.	22 μF	16V	M	
C0682	QFLC1HJ-563MZ	M CAP.	0.056 μF	50V	J	
C0685	QEN61CM-226Z	BP E CAP.	22 μF	16V	M	
C0687	QFLC1HJ-273MZ	M CAP.	0.027 μF	50V	J	
C0689	QEN61CM-226Z	BP E CAP.	22 μF	16V	M	
C0690-91	QFLC1HJ-823MZ	M CAP.	0.082 μF	50V	J	
C0692-93	QFLC1HJ-563MZ	M CAP.	0.056 μF	50V	J	
C0694-95	QFLC1HJ-153MZ	M CAP.	0.015 μF	50V	J	
COIL						
L0303	CELP057-120Z	PEAKING COIL	12 μH			
DIODE						
D0601-06	MTZJ10(A)-T2	ZENER DIODE				
TRANSISTOR						
Q0201-03	2SA933AS(QR)-T	SI.TRANSISTOR				
Q0301	2SC1740S(QR)-T	SI.TRANSISTOR				
Q0303	2SC1740S(QR)-T	SI.TRANSISTOR				
Q0601-02	DTC323TS-T	DIGI.TRANSISTOR				
IC						
IC0201	CXA1545AS	I.C.(MONO-ANA)				
IC0641	AN7395K	I.C.				
IC0642	TDA7315	I.C.				
IC0643	BA4558N	I.C.(MONO-ANA)				
OTHERS						
DL0301	CE42599-001	COMB FILTER				
J0201	QNN0089-001	PIN JACK				

PACKING

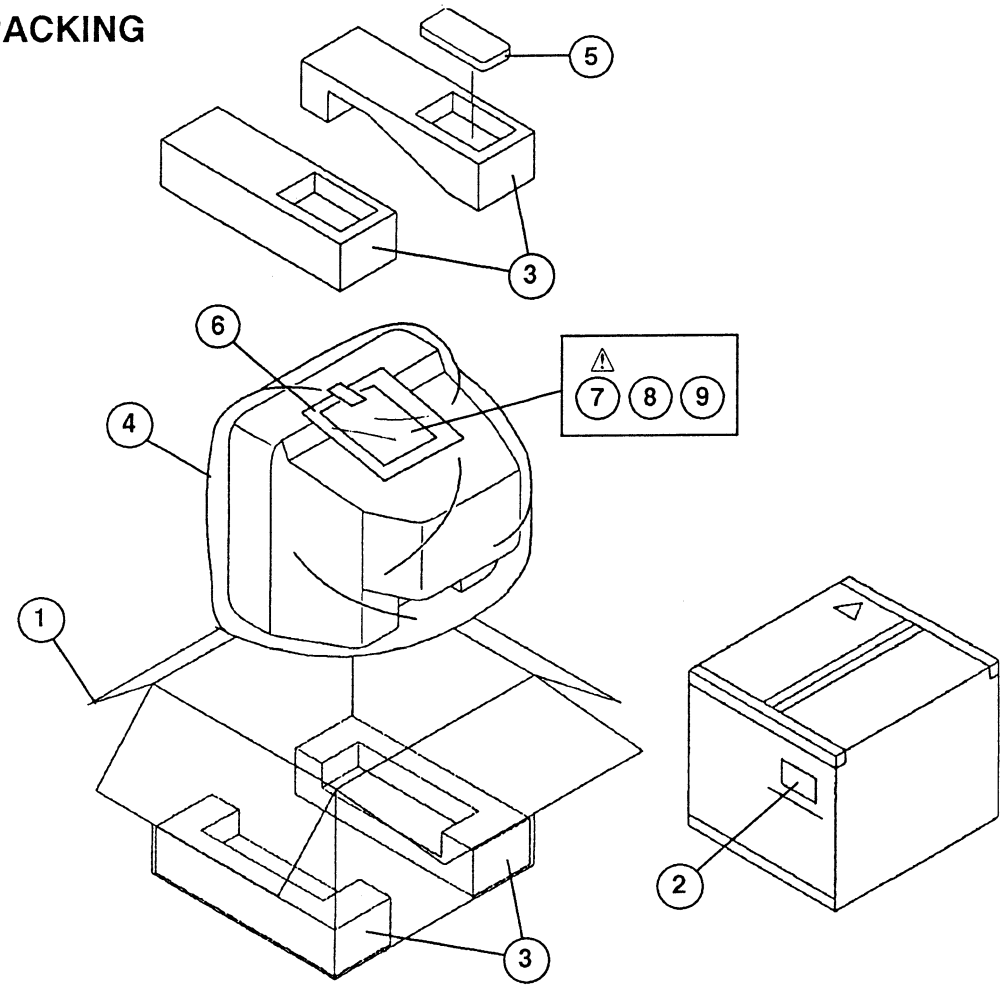

PACKING PARTS LIST

⚠	Ref.No.	Part No.	Part Name	Description	Local
[*AV-K29MX3*]					
	1	CP11613-006-H	PACKING CASE		
	2	CM47385-00B-H	POS/SERIAL LABEL		
	3	CP11633-00B-H	CUSHION ASSY	4pcs in 1set	
	4	CP30697-006-H	POLY BAG		
	5	RM-C439-1H	REMOCON UNIT		
	6	QPGA025-03505H	POLY BAG		
⚠	7	LCT0024-001A-H	INST BOOK		
	8	LCT0025-001A-H	DIGEST MANUAL		
[*AV-K29MX3(-A)*]					
	1	CP11613-046-H	PACKING CASE		
	2	CM47385-00B-H	POS/SERIAL LABEL		
	3	CP11633-00B-H	CUSHION ASSY	4pcs in 1set	
	4	CP30697-006-H	POLY BAG		
	5	RM-C439-1H	REMOCON UNIT		
	6	QPGA025-03505H	POLY BAG		
⚠	7	LCT0024-001A-H	INST BOOK		
	8	LCT0025-001A-H	DIGEST MANUAL		
	9	CEMK002-001	ADAPTOR PLUG		
[*AV-K29MX3(-SC)*]					
	1	CP11613-046-H	PACKING CASE		
	2	CM47385-00B-H	POS/SERIAL LABEL		
	3	CP11633-00B-H	CUSHION ASSY	4pcs in 1set	
	4	CP30697-006-H	POLY BAG		
	5	RM-C439-1H	REMOCON UNIT		
	6	QPGA025-03505H	POLY BAG		
⚠	7	LCT0026-001A-H	INST BOOK		

JVC
VICTOR COMPANY OF JAPAN, LIMITED
TELEVISION RECEIVER DIVISION 1106 Heta, Iwai-city, Ibaraki-prefecture, 306-06, Japan

AVK29MX3-H #4
AVK29MX3A-H #4
AVK29MX3SC-H #9999

Printed in Japan
VP 9705
NP0338

AV-K29MX3/AV-K29MX3(-A)/AV-K29MX3(-SC) STANDARD CIRCUIT DIAGRAM

■NOTE ON USING CIRCUIT DIAGRAMS

1.SAFETY

The components identified by the ⚠ symbol and shading are critical for safety. For continued safety replace safety critical components only with manufactures recommended parts.

2.SPECIFIED VOLTAGE AND WAVEFORM VALUES

The voltage and waveform values have been measured under the following conditions.

(1)Input signal	:PAL Colour bar signal
(2)Setting positions of each knob/button and variable resistor	:Original setting position when shipped
(3)Internal resistance of tester	:DC 20kΩ/V
(4)Oscilloscope sweeping time	:H ⇒20μS/div
	:V ⇒5mS/div
	:Others ⇒ Sweeping time is specified
(5)Voltage values	:All DC voltage values

* Since the voltage values of signal circuit vary to some extent according to adjustments, use them as reference values.

3.INDICATION OF PARTS SYMBOL[EXAMPLE]

●In the PW board :R1209→R209

4.INDICATIONS ON THE CIRCUIT DIAGRAM

(1)Resistors

●Resistance value

No unit	:[Ω]
K	:[KΩ]
M	:[MΩ]

●Rated allowable power

No indication	:1/6[W]
Others	:As specified

●Type

No indication	:Carbon resistor
OMR	:Oxide metal film resistor
MFR	:Metal film resistor
MPR	:Metal plate resistor
UNFR	:Uninflammable resistor
FR	:Fusible resistor

* Composition resistor 1/2 [W] is specified as 1/2S or Comp.

(2)Capacitors

●Capacitance value

1or higher	:[pF]
less than 1	:[μF]

●Withstand voltage

No indication	:DC50[V]
Others	:DC withstand voltage[V]
AC indicated	:AC withstand voltage[V]

* Electrolytic Capacitors
47/50[Example]:Capacitance value[μF]/withstand voltage[V]

●Type

No indication	:Ceramic capacitor
MY	:Mylar capacitor
MM	:Metalized mylar capacitor
PP	:Polypropylene capacitor
MPP	:Metalized polypropylene capacitor
MF	:Metalized film capacitor
TF	:Thin film capacitor
BP	:Bipolar electrolytic capacitor
TAN	:Tantalum capacitor

(3)Coils

No unit	:[μH]
Others	:As specified

(4)Power Supply

:B1
:B2(12V)
:9V
:5V

* Respective voltage values are indicated.

(5)Test Point

: Test point
: Only test point display

(6)Connecting method

: Connector
: Wrapping or soldering
: Receptacle

(7)Ground symbol

: LIVE side ground
: ISOLATED(NEUTRAL) side ground
: EARTH ground
: DIGITAL ground

5.NOTE FOR REPAIRING SERVICE

This model's power circuit is partly different in the GND. The difference of the GND is shown by the LIVE : (⊥) side GND and the ISOLATED(NEUTRAL) : (⏚) side GND. Therefore, care must be taken for the following points.

(1) Do not touch the LIVE side GND or the LIVE side GND and the ISOLATED(NEUTRAL) side GND simultaneously. If the above caution is not respected, an electric shock may be caused. Therefore, make sure that the power cord is surely removed from the receptacle when, for example, the chassis is pulled out.

(2) Do not short between the LIVE side GND and ISOLATED(NEUTRAL) side GND or never measure with a measuring apparatus (oscilloscope, etc.) the LIVE side GND and ISOLATED(NEUTRAL) side GND at the same time. If the above precaution is not respected, a fuse or any parts will be broken.

◇ **Since the circuit diagram is a standard one, the circuit and circuit constants may be subject to change for improvement without any notice.**

SEMICONDUCTOR SHAPES (* = Bottom view)

TRANSISTORS

2SA1013(0)
2SA673(C)
2SC2240(GB)
2SC1906
2SA966(0Y)-T
2SC1815(YG)
2SC2482(C1)
2SC4722(NP)
2PA1015(YG)
2PC1815(YG)

2SA933AS(QR)
2SA933S(QR)
2SC1740S(QR)
2SC2785(JH)
DTC124ESA-T
DTC323TS

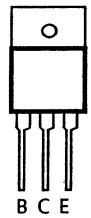

2SD1554-C1
2SD1878-YD
2SD1876-YD
BU2506DX
MTA2N60E
2SC4544-C1

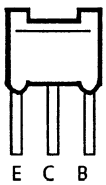

2SC4502
2SC5082(L-P)
2SC5083(L-P)

2SK301(Q)
BSN274

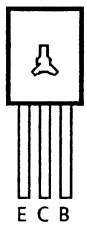

2SC2371(MLK)
2SC3271(NP)

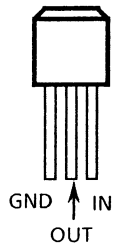

DTC144ESA
DTA144GS
DTC144ES
DTA144ES

ICs

TDA8351 / N3

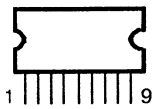

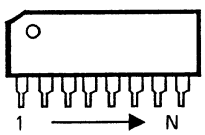

LA7016

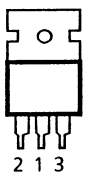

S1854-C1
S1854-C2

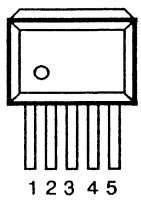

LA7975

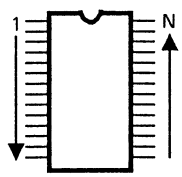

MSP3410-SDIL
SAA5281P / E / M3
M37201M6-B44SP
P83C654FBP / 541
MN1873237JKH6
M52343SP
M37102M8-C41SP

1 → 5

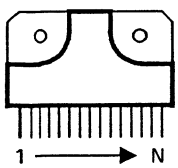

LA7838
UPC1488H
LA7837
TA8200AH

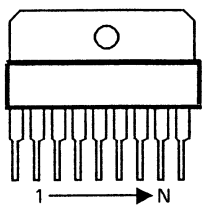

AN5265

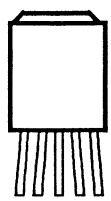

L78LR05E-MA

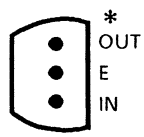

KIA78L08BP

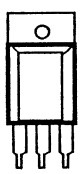

KIA7805PI AN7805F
KIA7808PI AN78N12
AN78M05

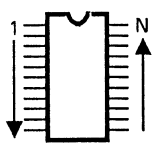

TEA6416 TEA5114A
LA7577N M52325P
TDA8366 MC44603P
U3660M-B BU4066BC
TDA4665

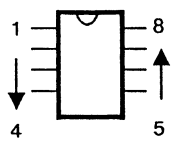

AT24C08-G29MS
ST93C46AB1
AT24C04-K29MX3
AT93C56-10PC
XL24C04P-21ME

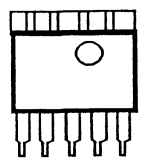

STR-S6707
STR-S6706

MAIN PARTS ALIGNMENTS LOCATION & WIRING DIAGRAM

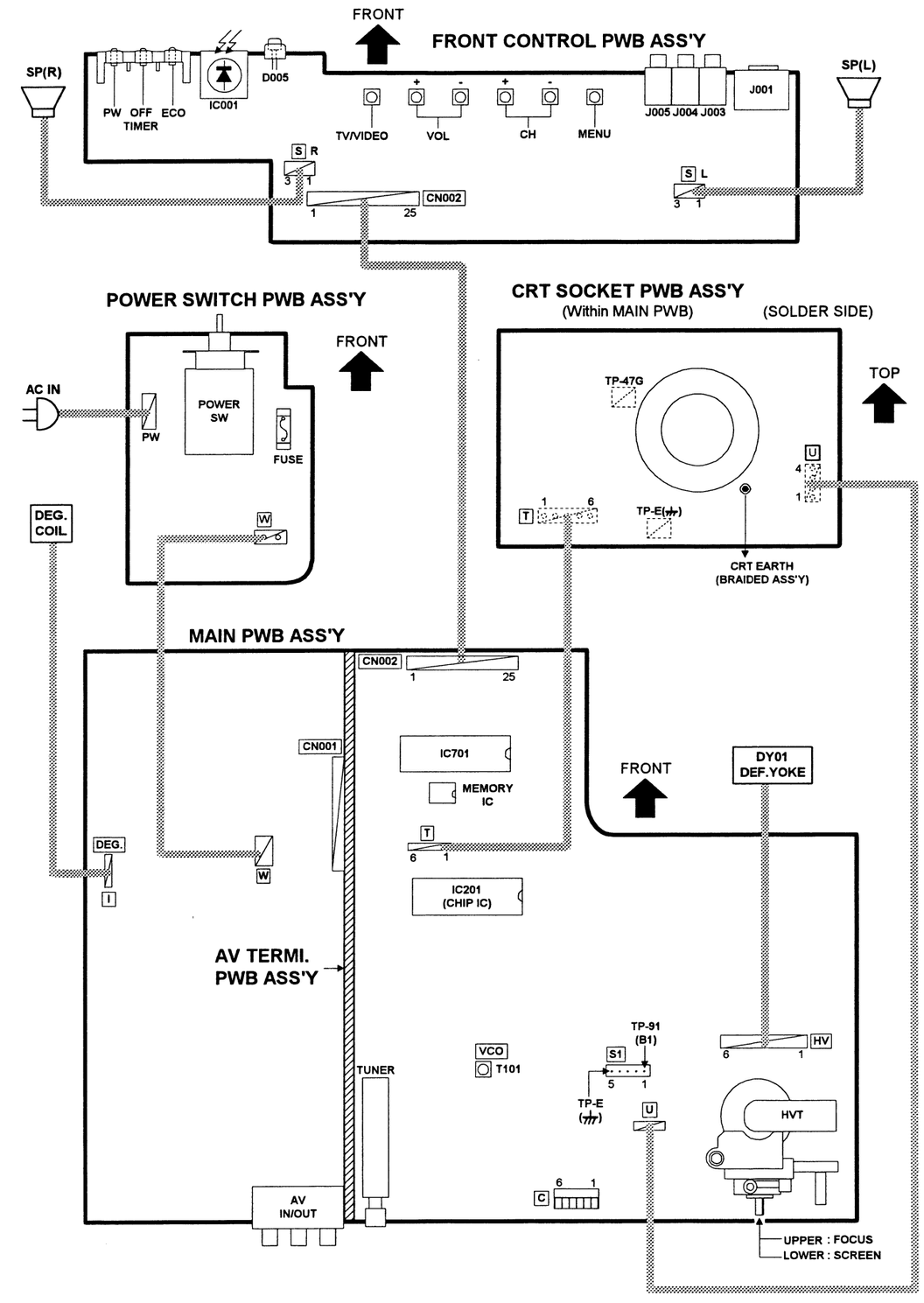

REMOTE CONTROL TRANSMITTER CIRCUIT DIAGRAM (RM-C439-1H)

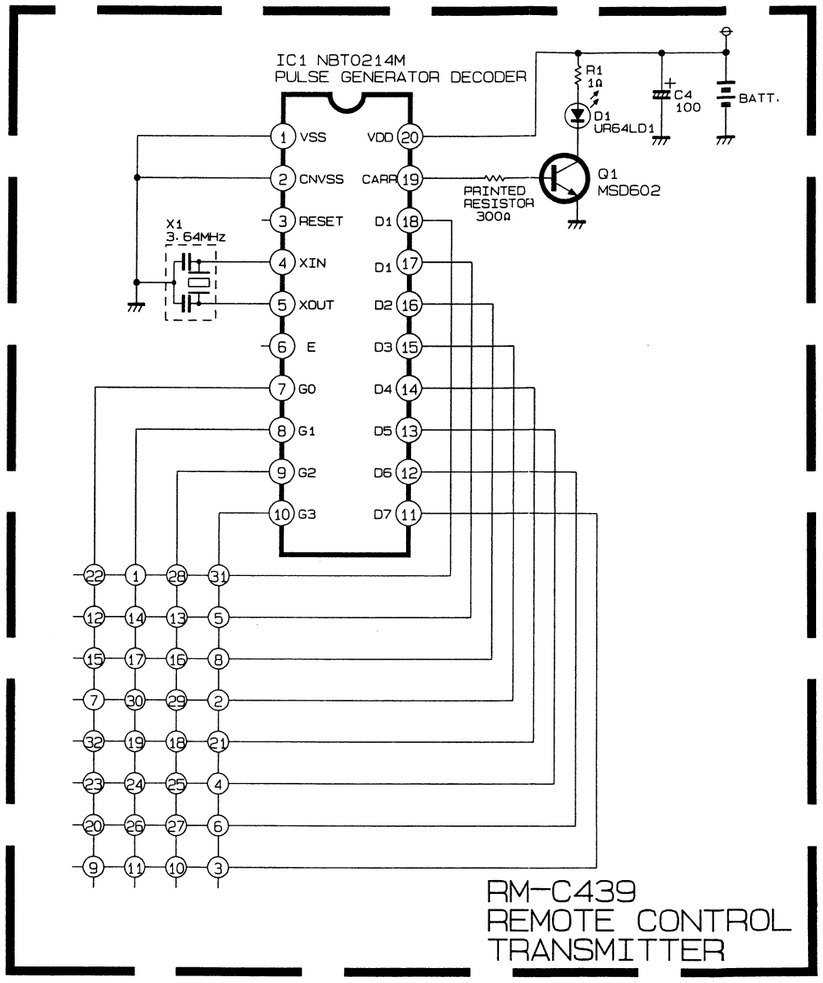

● KEY FUNCTION

KEY NO.	KEY NAME	KEY NO.	KEY NAME	KEY NO.	KEY NAME
1	POWER	13	5	25	VOLUME +
2	ECO SENSOR	14	6	26	VOLUME −
3	COLOUR SYSTEM	15	7	27	FUNCTION △
4	SOUND SYSTEM	16	8	28	FUNCTION ▽
5	PICTURE MODE	17	9	29	FUNCTION −
6	LIVE SPATIAL	18	0	30	FUNCTION +
7	OFF TIMER	19	−/--	31	DISPLAY
8	SUPER BASS	20	TV/VIDEO	32	CH SCAN
9	1	21	MAIN/SUB		
10	2	22	CHANNEL −		
11	3	23	CHANNEL +		
12	4	24			

BLOCK DIAGRAM

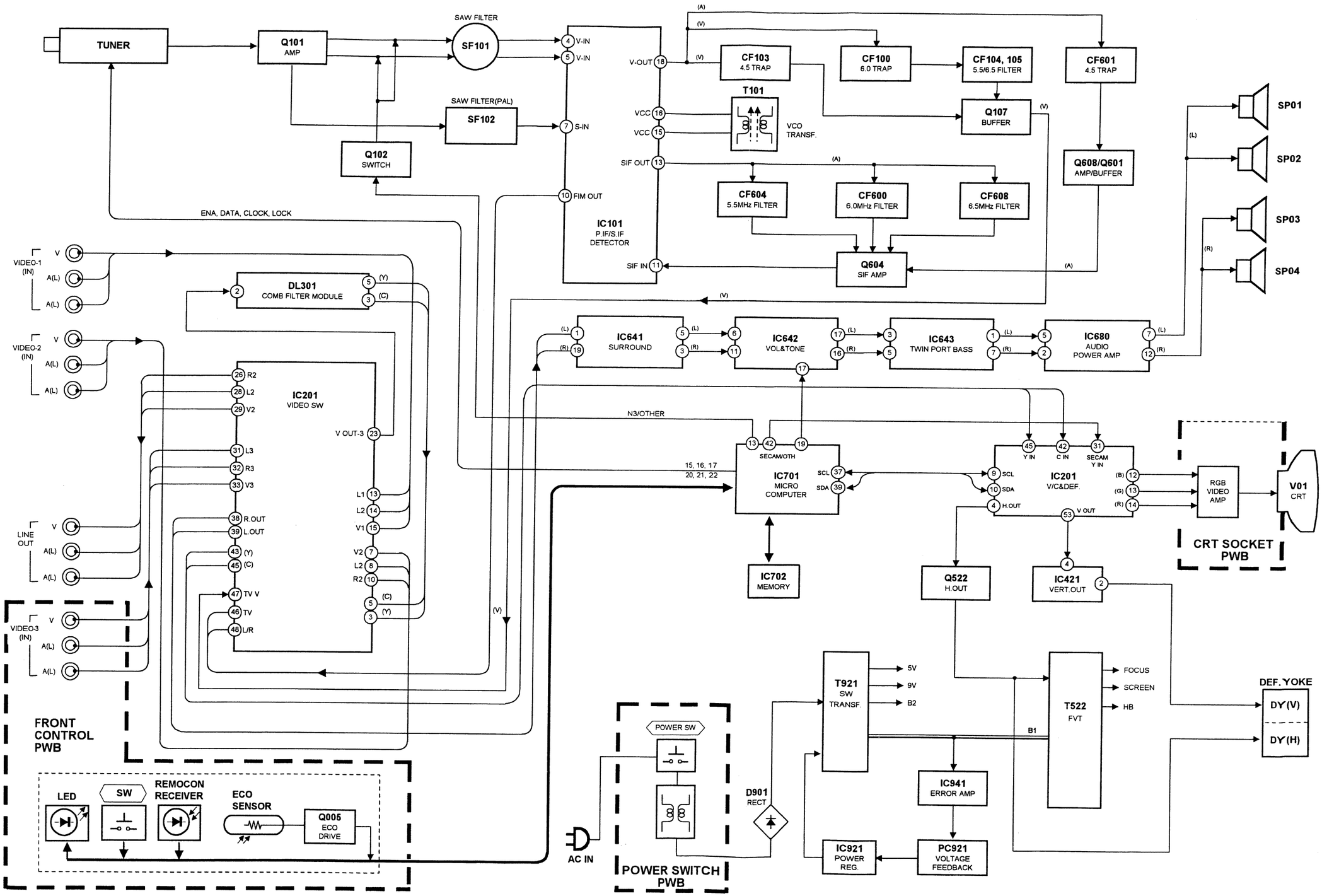

CIRCUIT DIAGRAMS AND PWB PATTERNS

AV TERMINAL PWB CIRCUIT DIAGRAM

Refer to the following PWB pattern : AV TERMINAL PWB PATTERN page 2-15～2-16.

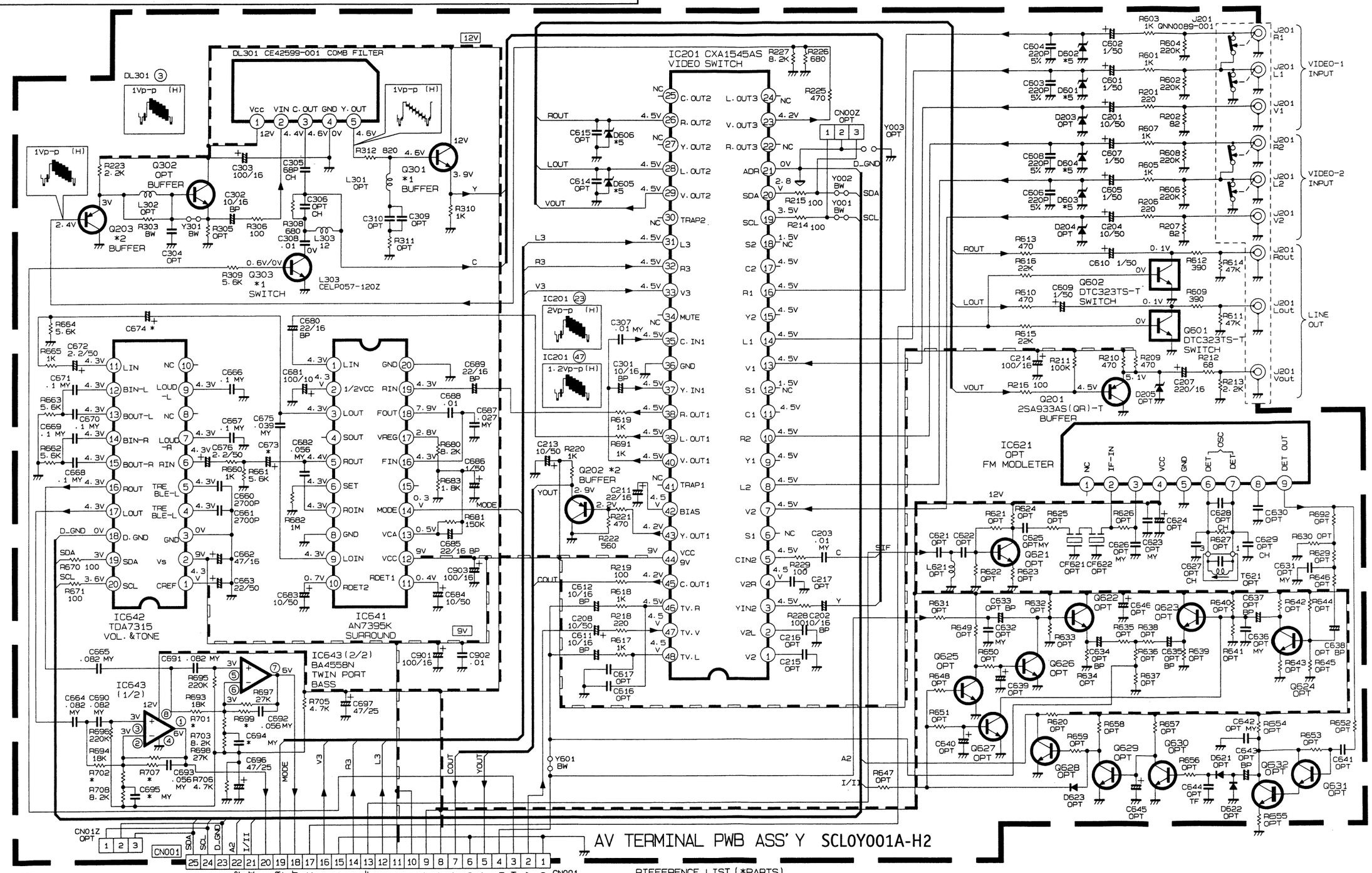

NOTE

*1 : NPN Tr	2SC1740S(QR)-T
*2 : PNP Tr	2SA933AS(QR)-T
*5 : ZENER DIODE	MTZJ10(A)-T2
OPT: NON MOUNT(OPEN)	
BW : BUS WIRE	

RIFFERENCE LIST (*PARTS)

*	SCL 0Y001A-H2
C673	.47/50
C674	.47/50
R699	10K
R707	10K

	SCL 0Y001A-H2
R701	2.2K
R702	2.2K
C694	.015
C695	.015

FRONT CONTROL & MAIN PWB CIRCUIT DIAGRAMS

Refer to the following PWB pattern : FRONT CONTROL PWB PATTERN page 2-20, MAIN PWB PATTERN page 2-17～2-18.

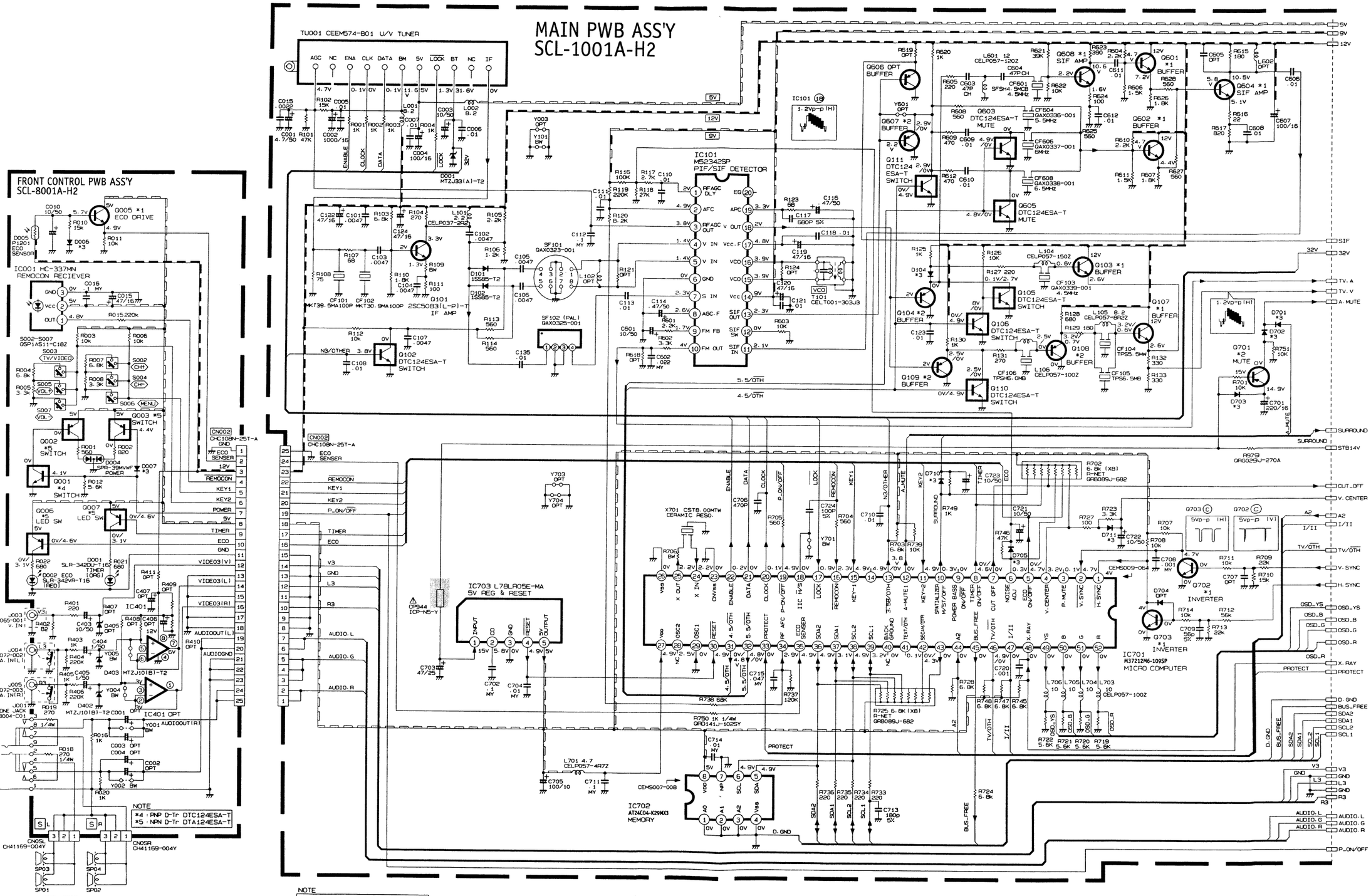

MAIN & CRT SOCKET PWB CIRCUIT DIAGRAMS

Refer to the following PWB pattern : MAIN PWB PATTERN page 2-17～2-18,
CRT SOCKET PWB PATTERN page 2-19.

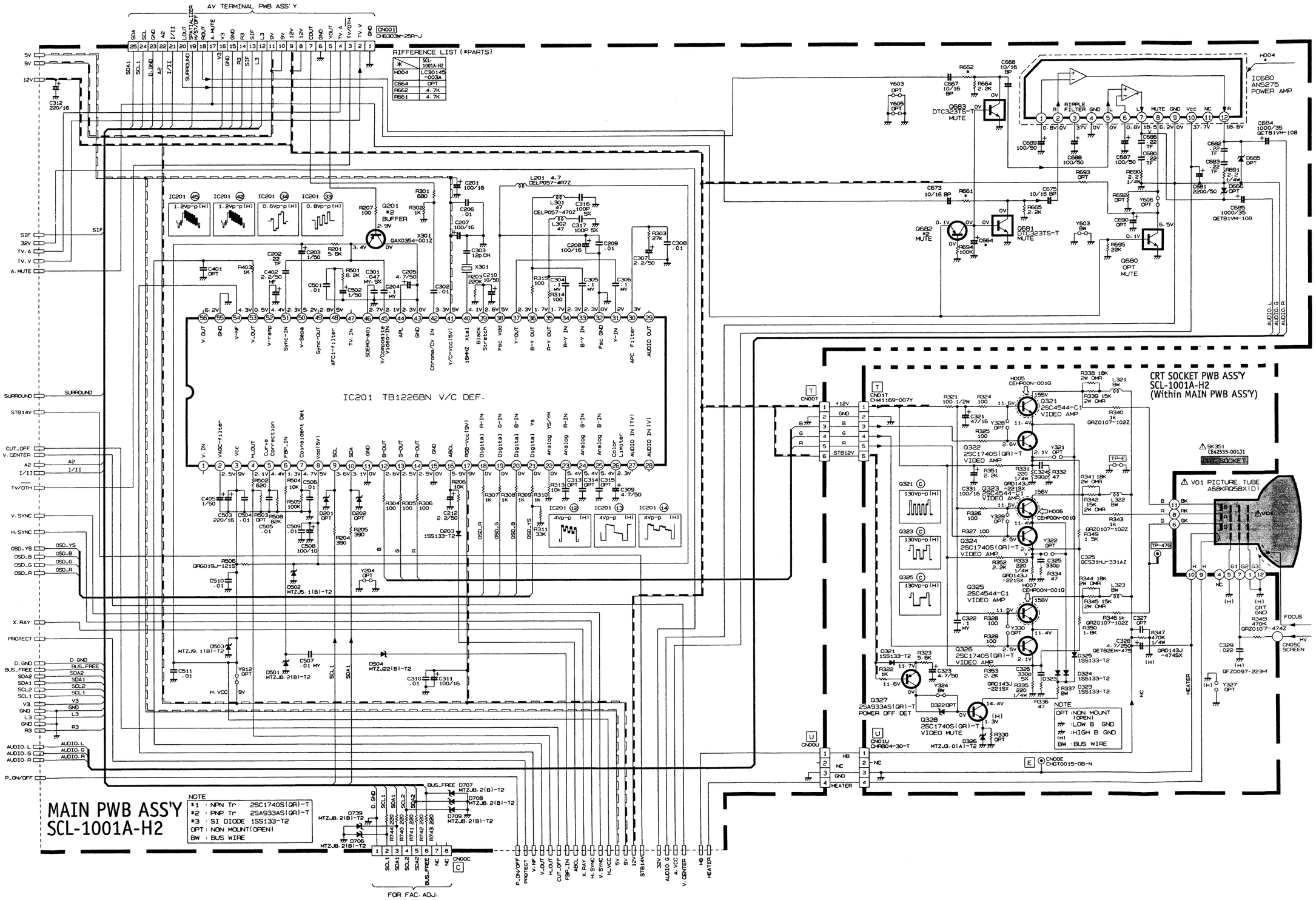

POWER SWITCH & MAIN PWB CIRCUIT DIAGRAMS

Refer to the following PWB pattern : POWER SWITCH PWB PATTERN page 2-19, MAIN PWB PATTERN page 2-17 ~ 2-18.

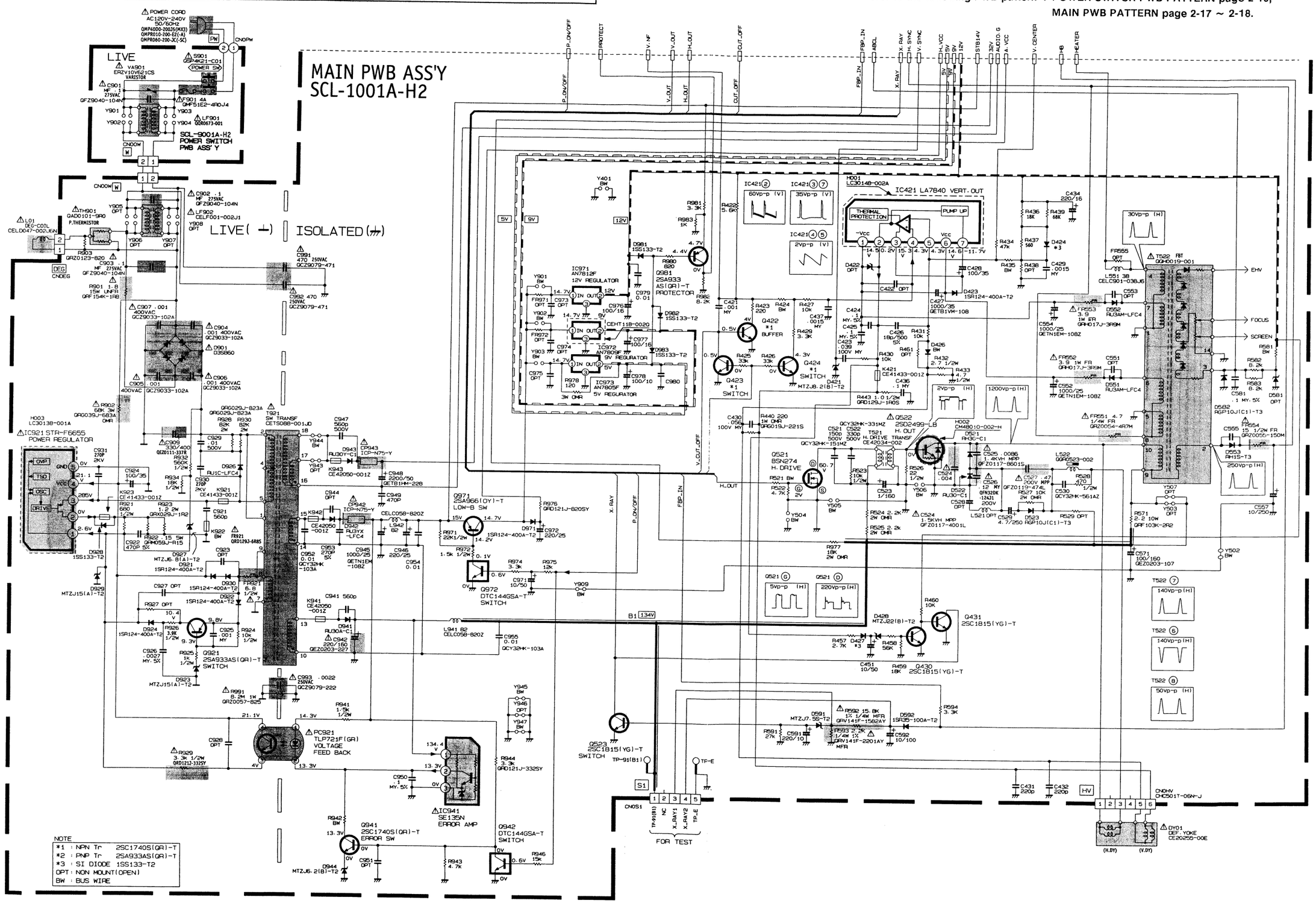

NOTE

*1	: NPN Tr	2SC1740S(QR)-T
*2	: PNP Tr	2SA933AS(QR)-T
*3	: SI DIODE	1SS133-T2
OPT	: NON MOUNT(OPEN)	
BW	: BUS WIRE	

AV TERMINAL PWB PATTERN (SCL0Y001A-H2)

(Magnification Rate 150%)

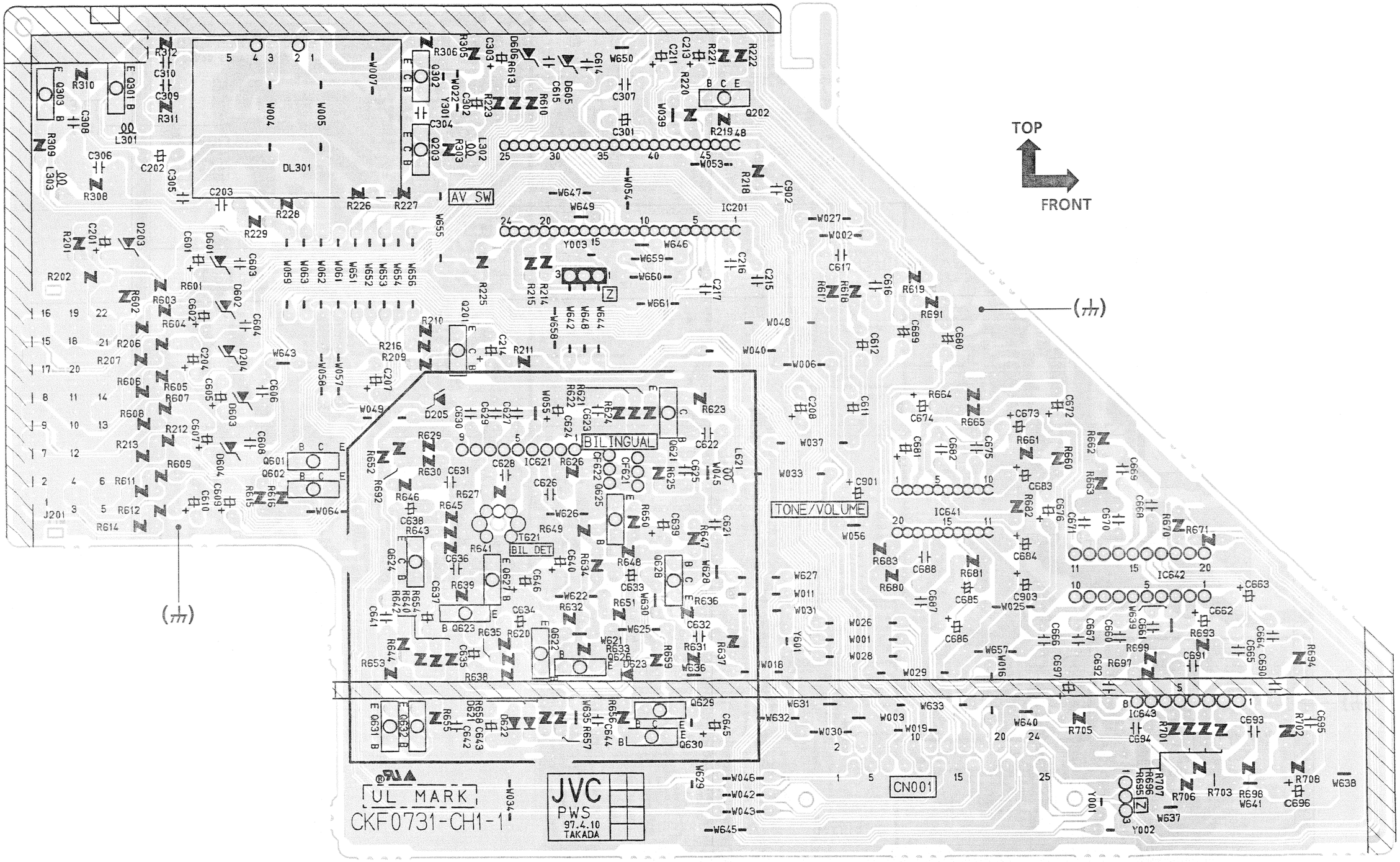

MAIN PWB PATTERN (SCL-1001A-H2)

(Magnification Rate 95%)

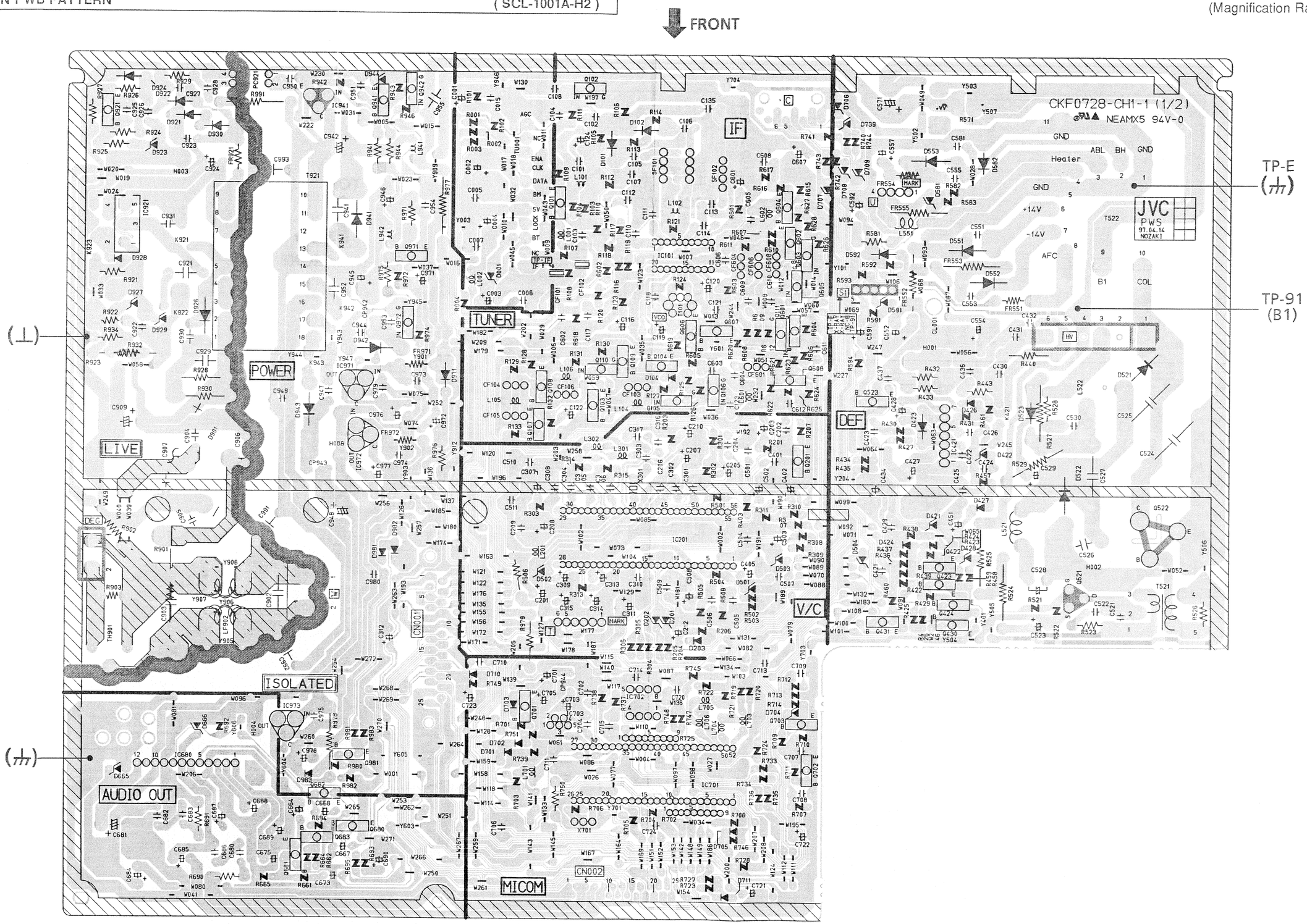

CRT SOCKET PWB PATTERN (Within MAIN PWB) (SCL-1001A-H2)

(Magnification Rate 120%)

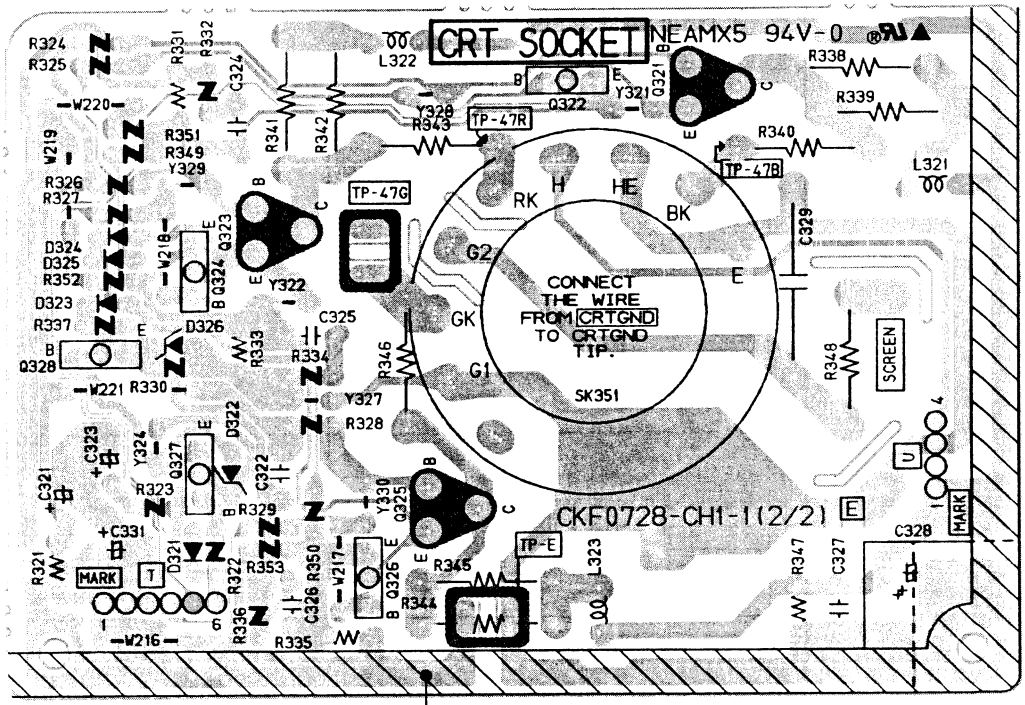

POWER SWITCH PWB PATTERN (SCL-9001A-H2)

(Magnification Rate 150%)

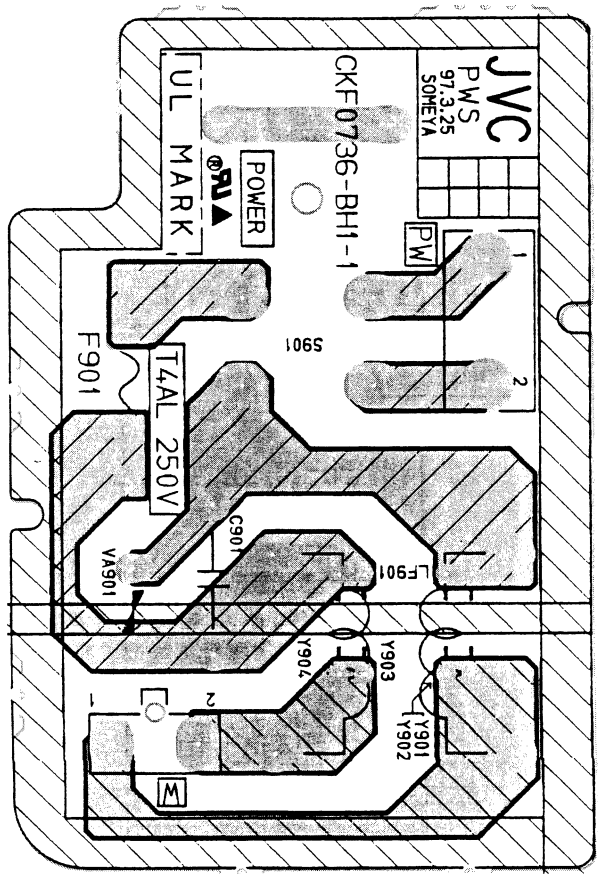

FRONT CONTROL PWB PATTERN (SCL-8001A-H2)
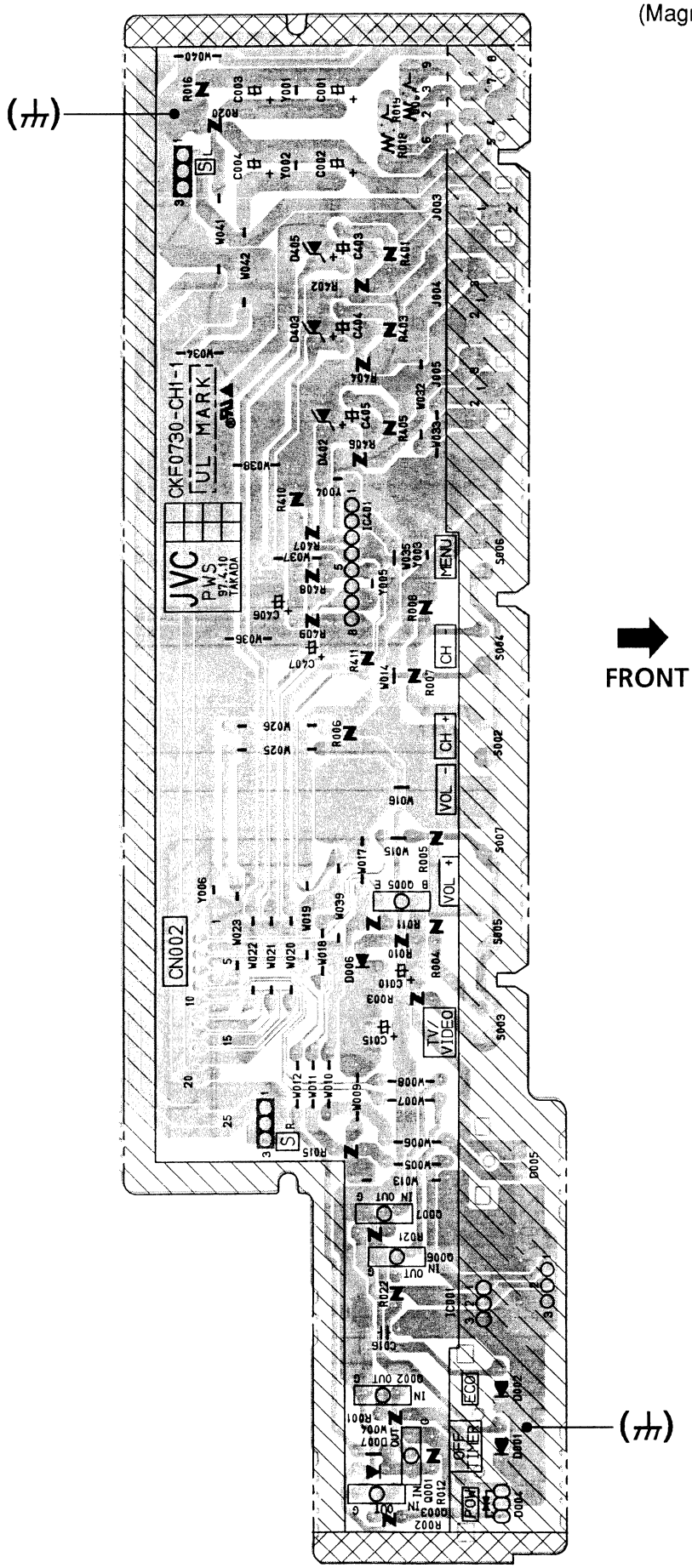
(Magnification Rate 100%)